TOSHIBA

E23-103

Engineering Data Book

ESTiA

Air to Water Heat Pump

Hydro Unit

-Wall Mounted Type-

HWT-601XWHM3W-E	HWT-1101XWHT9W-E
HWT-601XWHM6W-E	HWT-1401XWHM3W-E
HWT-601XWHT6W-E	HWT-1401XWHM6W-E
HWT-1101XWHM3W-E	HWT-1401XWHT6W-E
HWT-1101XWHM6W-E	HWT-1401XWHT9W-E
HWT-1101XWHT6W-E	

-All In One Type-

HWT-602S21SM3W-E	HWT-1102S21ST9W-E
HWT-602S21SM6W-E	HWT-1102S21MT6W-E
HWT-602S21ST6W-E	HWT-1102S21MT9W-E
HWT-602S21MM3W-E	HWT-1402S21SM3W-E
HWT-602S21MM6W-E	HWT-1402S21MM3W-E
HWT-602S21MT6W-E	HWT-1402S21SM6W-E
HWT-1102S21SM3W-E	HWT-1402S21MM6W-E
HWT-1102S21SM6W-E	HWT-1402S21ST6W-E
HWT-1102S21MM3W-E	HWT-1402S21MT6W-E
HWT-1102S21MM6W-E	HWT-1402S21ST9W-E
HWT-1102S21ST6W-E	HWT-1402S21MT9W-E

4/6 kw

8/11/14 kw

Outdoor Unit

HWT-401HW-E	HWT-1401HRW-E
HWT-601HW-E	HWT-801H8W-E
HWT-801HW-E	HWT-1101H8W-E
HWT-1101HW-E	HWT-1401H8W-E
HWT-1401HW-E	HWT-801H8RW-E
HWT-801HRW-E	HWT-1101H8RW-E
HWT-1101HRW-E	HWT-1401H8RW-E

Hot Water Cylinder

HWS-1501CSHM3-E	HWS-3001CSHM3-E
HWS-2101CSHM3-E	

Contents

1. SYSTEM OVERVIEW 3
1-1. System combination 4
1-2. System specifications 7
2. HYDRO UNIT 9
2-1. Specifications 10
2-1-1.Hydro unit specifications 10
Wall Mounted Type 10
All In One Type 13
2-1-2.Electrical supply / cable specifications 19
Wall Mounted Type 19
All In One Type 21
2-2. Dimension 23
Wall Mounted Type 23
All In One Type 24
2-3. Piping Diagram 25
Wall Mounted Type 25
All In One Type 27
2-4. Wiring Diagram 29
2-4-1.Wiring Diagram 29
Wall Mounted Type 29
All In One Type 30
2-4-2.Power line 33
Wall Mounted Type 33
All In One Type 35
2-4-3.Control line 36
Wall Mounted Type 36
All In One Type 37
2-4-4.External Device 39
Wall Mounted Type 39
All In One Type 39
2-5. Capacity Tables 42
2-6. Part Load Tables 66
2-7. Sound Data 130
2-7-1.Sound Characteristics (NC Curve) 130
2-7-2.Sound Power 132
3. OUTDOOR UNIT 134
3-1. Specifications 135
3-1-1.Outdoor unit specifications 135
3-2. Dimension 143

3-3. Piping Diagram 145
3-4. Wiring Diagram 147
3-4-1.Outdoor Unit (Single phase type) 147
3-4-2.Power line 151
3-4-3.Wiring between Hydro Unit and Outdoor Unit. 152
3-5. Operation Range 153
3-6. Sound Data 156
3-6-1.Sound Characteristics (NC Curve) 156
3-6-2.Sound Power 164
4. HOT WATER CYLINDER 172
4-1. Specifications 173
4-2. Dimension 174
4-3. Piping Diagram 175
4-4. Wiring Diagram 177

1. SYSTEM OVERVIEW

1-1. System combination

Combination

	Outdoor Unit								
	1 phase								
	Standard					with Heater			
Hydro Unit -Wall Mounted Type-	**HWT-401HW-E**	**HWT-601HW-E**	**HWT-801HW-E**	**HWT-1101HW-E**	**HWT-1401HW-E**	**HWT-801HRW-E**	**HWT-1101HRW-E**	**HWT-1401HRW-E**	**Backup heater**
HWT-601XWHM3W-E	○	○							~, 3 kW
HWT-601XWHM6W-E	○	○							~, 6 kW
HWT-601XWHT6W-E	○	○							3N ~, 6 kW
HWT-1101XWHM3W-E			○	○		○	○		~, 3 kW
HWT-1101XWHM6W-E			○	○		○	○		~, 6 kW
HWT-1101XWHT6W-E			○	○		○	○		3N ~, 6 kW
HWT-1101XWHT9W-E			○	○		○	○		3N ~, 9 kW
HWT-1401XWHM3W-E					○			○	~, 3 kW
HWT-1401XWHM6W-E					○			○	~, 6 kW
HWT-1401XWHT6W-E					○			○	3N ~, 6 kW
HWT-1401XWHT9W-E					○			○	3N ~, 9 kW
Hydro Unit -All In One Type-	**HWT-401HW-E**	**HWT-601HW-E**	**HWT-801HW-E**	**HWT-1101HW-E**	**HWT-1401HW-E**	**HWT-801HRW-E**	**HWT-1101HRW-E**	**HWT-1401HRW-E**	**Backup heater**
HWT-602S21SM3W-E	○	○							~, 3 kW
HWT-602S21SM6W-E	○	○							~, 6 kW
HWT-602S21MM3W-E	○	○							~, 3 kW
HWT-602S21MM6W-E	○	○							~, 6 kW
HWT-602S21ST6W-E	○	○							3N ~, 6 kW
HWT-602S21MT6W-E	○	○							3N ~, 6 kW
HWT-1102S21SM3W-E			○	○		○	○		~, 3 kW
HWT-1102S21SM6W-E			○	○		○	○		~, 6 kW
HWT-1102S21MM3W-E			○	○		○	○		~, 3 kW
HWT-1102S21MM6W-E			○	○		○	○		~, 6 kW
HWT-1102S21ST6W-E			○	○		○	○		3N ~, 6 kW
HWT-1102S21MT6W-E			○	○		○	○		3N ~, 6 kW
HWT-1102S21ST9W-E			○	○		○	○		3N ~, 9 kW
HWT-1102S21MT9W-E			○	○		○	○		3N ~, 9 kW
HWT-1402S21SM3W-E					○			○	~, 3 kW
HWT-1402S21SM6W-E					○			○	~, 6 kW
HWT-1402S21MM3W-E					○			○	~, 3 kW
HWT-1402S21MM6W-E					○			○	~, 6 kW
HWT-1402S21ST6W-E					○			○	3N ~, 6 kW
HWT-1402S21MT6W-E					○			○	3N ~, 6 kW
HWT-1402S21ST9W-E					○			○	3N ~, 9 kW
HWT-1402S21MT9W-E					○			○	3N ~, 9 kW

	Outdoor Unit						
	3 phase						
	Standard			with Heater			
Hydro Unit -Wall Mounted Type-	**HWT-801H8W-E**	**HWT-1101H8W-E**	**HWT-1401H8W-E**	**HWT-801H8RW-E**	**HWT-1101H8RW-E**	**HWT-1401H8RW-E**	**Backup heater**
HWT-1101XWHM3W-E	○	○		○	○		~, 3 kW
HWT-1101XWHM6W-E	○	○		○	○		~, 6 kW
HWT-1101XWHT6W-E	○	○		○	○		3N ~, 6 kW
HWT-1101XWHT9W-E	○	○		○	○		3N ~, 9 kW
HWT-1401XWHM3W-E			○			○	~, 3 kW
HWT-1401XWHM6W-E			○			○	~, 6 kW
HWT-1401XWHT6W-E			○			○	3N ~, 6 kW
HWT-1401XWHT9W-E			○			○	3N ~, 9 kW
Hydro Unit -All In One Type-	**HWT-801H8W-E**	**HWT-1101H8W-E**	**HWT-1401H8W-E**	**HWT-801H8RW-E**	**HWT-1101H8RW-E**	**HWT-1401H8RW-E**	**Backup heater**
HWT-1102S21SM3W-E	○	○		○	○		~, 3 kW
HWT-1102S21SM6W-E	○	○		○	○		~, 6 kW
HWT-1102S21ST6W-E	○	○		○	○		3N ~, 6 kW
HWT-1102S21ST9W-E	○	○		○	○		3N ~, 9 kW
HWT-1102S21MM3W-E	○	○		○	○		~, 3 kW
HWT-1102S21MM6W-E	○	○		○	○		~, 6 kW
HWT-1102S21MT6W-E	○	○		○	○		3N ~, 6 kW
HWT-1102S21MT9W-E	○	○		○	○		3N ~, 9 kW
HWT-1402S21SM3W-E			○			○	~, 3 kW
HWT-1402S21SM6W-E			○			○	~, 6 kW
HWT-1402S21ST6W-E			○			○	3N ~, 6 kW
HWT-1402S21ST9W-E			○			○	3N ~, 9 kW
HWT-1402S21MM3W-E			○			○	~, 3 kW
HWT-1402S21MM6W-E			○			○	~, 6 kW
HWT-1402S21MT6W-E			○			○	3N ~, 6 kW
HWT-1402S21MT9W-E			○			○	3N ~, 9 kW

		Hot water cylinder		
		HWS-1501 CSHM3-E	HWS-2101 CSHM3-E	HWS-3001 CSHM3-E
Hydro unit	HWT-601XWHM3W-E	○		
	HWT-601XWHM6W-E			
	HWT-601XWHT6W-E			
	HWT-1101XWHM3W-E			
	HWT-1101XWHM6W-E			
	HWT-1101XWHT6W-E			
	HWT-1101XWHT9W-E			
	HWT-1401XWHM3W-E			
	HWT-1401XWHM6W-E			
	HWT-1401XWHT6W-E			
	HWT-1401XWHT9W-E			

Options

Description	Model name
2nd remote controller	HWS-AMSU51-E
ESTIA 0-10 V Interface	HWS-IFAIP01U-E
Open Protocol Modbus interface	BMS-IFMB0UEW-E
Open Protocol KN Interface	BMS-IFKX0UEW-E
Wireless interface	HWS-IWF01
Recuirculation Pipe kit	HWS-CPR01W-E

1-2. System specifications

Wall Mounted Type

Outdoor unit			HWT-401HW-E	HWT-601HW-E	HWT-801H(R)W-E	HWT-1101H(R)W-E	HWT-1401H(R)W-E
Hydro unit			HWT-601XWH**W-E		HWT-1101XWH**W-E		HWT-1401XWH**W-E
Rated Heating condition LWT=35°C dT=5deg TO=7°C	Capacity	kW	4.0	6.0	8.0	11.0	14.0
	Input	kW	0.77	1.25	1.54	2.39	3.0
	COP	W/W	5.20	4.80	5.19	4.60	4.60
	Rated water flow rate	L/min	11.6	17.3	23.0	32.1	40.5
Rated Cooling condition LWT=7°C dT=5deg TO=35°C	Capacity	kW	4.0	5.0	6.0	8.0	10.0
	Input	kW	1.16	1.52	1.88	2.86	4.08
	COP	W/W	3.45	3.30	3.20	2.80	2.45
	Rated water flow rate	L/min	11.5	14.3	16.7	22.7	28.6
Power supply			~ 220-240 V 50 Hz				
Maximum current		A	14.6	14.6	20.3	20.3	28.8

Outdoor unit			HWT-801H8(R)W-E	HWT-1101H8(R)W-E	HWT-1401H8(R)W-E
Hydro unit			HWT-1101XWH**W-E	HWT-1101XWH**W-E	HWT-1401XWH**W-E
Rated Heating condition LWT=35°C dT=5deg TO=7°C	Capacity	kW	8.0	11.0	14.0
	Input	kW	1.55	2.30	3.04
	COP	W/W	5.06	4.74	4.60
	Rated water flow rate	L/min	23.0	32.1	40.5
Rated Cooling condition LWT=7°C dT=5deg TO=35°C	Capacity	kW	6.0	8.0	10.0
	Input	kW	1.94	2.88	4.08
	COP	W/W	2.87	2.62	2.45
	Rated water flow rate	L/min	16.7	22.7	28.6
Power supply			3N ~ 380-415 V 50 Hz		
Maximum current		A	13	13	13

* Rated condition capacity and power input are the data at rated compressor operating frequency.
* Power input does not include water pump power.
* Capacity and power input are measured in accordance with EN14511.

TO : Outdoor temperature (°C)
LWT : Leaving water temperature (°C)
dT : Delta temperature (deg)
Leaving water temperature - Return water temperature (Heating)
Return water temperature - Leaving water temperature (Cooling)

All In One Type

Outdoor unit			HWT-401HW-E	HWT-601HW-E	HWT-801H(R)W-E	HWT-1101H(R)W-E	HWT-1401H(R)W-E
Hydro unit			HWT-602S21***W-E		HWT-1102S21***W-E		HWT-1402S21***W-E
Rated Heating condition LWT=35°C dT=5deg TO=7°C	Capacity	kW	4.0	6.0	8.0	11.0	14.0
	Input	kW	0.77	1.25	1.54	2.39	3.0
	COP	W/W	5.20	4.80	5.19	4.60	4.60
	Rated water flow rate	L/min	11.6	17.3	23.0	32.1	40.5
Rated Cooling condition LWT=7°C dT=5deg TO=35°C	Capacity	kW	4.0	5.0	6.0	8.0	10.0
	Input	kW	1.16	1.52	1.88	2.86	4.08
	COP	W/W	3.45	3.30	3.20	2.80	2.45
	Rated water flow rate	L/min	11.5	14.3	16.7	22.7	28.6
Power supply			~ 220-240 V 50 Hz				
Maximum current		A	14.6	14.6	20.3	20.3	28.8

Outdoor unit			HWT-801H8(R)W-E	HWT-1101H8(R)W-E	HWT-1401H8(R)W-E
Hydro unit			HWT-1102S21***W-E	HWT-1102S21***W-E	HWT-1402S21***W-E
Rated Heating condition LWT=35°C dT=5deg TO=7°C	Capacity	kW	8.0	11.0	14.0
	Input	kW	1.55	2.30	3.04
	COP	W/W	5.06	4.74	4.60
	Rated water flow rate	L/min	23.0	32.1	40.5
Rated Cooling condition LWT=7°C dT=5deg TO=35°C	Capacity	kW	6.0	8.0	10.0
	Input	kW	1.94	2.88	4.08
	COP	W/W	2.87	2.62	2.45
	Rated water flow rate	L/min	16.7	22.7	28.6
Power supply			3N ~ 380-415 V 50 Hz		
Maximum current		A	13	13	13

* Rated condition capacity and power input are the data at rated compressor operating frequency.
* Power input does not include water pump power.
* Capacity and power input are measured in accordance with EN14511.

TO : Outdoor temperature (°C)
LWT : Leaving water temperature (°C)
dT : Delta temperature (deg)
Leaving water temperature - Return water temperature (Heating)
Return water temperature - Leaving water temperature (Cooling)

2. HYDRO UNIT

2-1. Specifications

2-1-1. Hydro unit specifications

Wall Mounted Type

Hydro unit			HWT-601XWHM3W-E	HWT-601XWHM6W-E	HWT-601XWHT6W-E
Back up heater	back up heater	kW	3.0	6.0	6.0
	Power supply		~ 220-240 V 50 Hz	~ 220-240 V 50 Hz	3N ~ 380-415 V 50 Hz
	Maximum current	A	13	26	13 (13A*2P)
Hot water cylinder heater*	Power supply		~ 220-240 V 50 Hz		
	Maximum current	A	12		
Appearance	Color		White		
	Material		Painted steel sheet		
Outer dimension	Height	mm	720		
	Width	mm	450		
	Depth	mm	235		
Unit weight		kg	27		
Packing dimension	Height	mm	846		
	Width	mm	534		
	Depth	mm	309		
Total weight	Unit and packing	kg	30		
Heat exchanger	Type		Brazed plate		
	Water volume	litres	0.9		
	Minimum flow rate	L/min	11		
Water pump	Power input (Max)	W	60		
	Delivery head	m	7.5		
Expansion vessel	Volume	litres	8		
	Initial pressure	Mpa (bar)	0.1 (1)		
Pressure relief valve	Operating pressure	Mpa (bar)	0.43 (4.3)		
Sound pressure level (Cooling/Heating)	MAX	dB(A)	29/29		
	Rated	dB(A)	29/29		
	Low noise	dB(A)	29/29		
Sound power level (Cooling/Heating)	MAX	dB(A)	40/40		
	Rated	dB(A)	40/40		
	Low noise	dB(A)	40/40		
Operation water Temp.	heating	°C	20-55		
	Cooling	°C	7-25		
Water pipe	Outlet	mm	25.4		
	Inlet	mm	25.4		
Refrigerant pipe	Gas	mm	12.7		
	Liquid	mm	6.4		
Drain port		mm	16.0 inner diameter for drain hose		
Note			* The electric heater, incorporated in the hot water cylinder, requires separate supply to hydro unit.		

Wall Mounted Type

Hydro unit			HWT-1101XWHM3W-E	HWT-1101XWHM6W-E	HWT-1101XWHT6W-E	HWT-1101XWHT9W-E
Back up heater	back up heater	kW	3.0	6.0	6.0	9.0
	Power supply		~ 220-240 V 50 Hz	~ 220-240 V 50 Hz	3N ~ 380-415 V 50 Hz	3N ~ 380-415 V 50 Hz
	Maximum current	A	13	26	13 (13A*2P)	13 (13A*3P)
Hot water cylinder heater*	Power supply		~ 220-240 V 50 Hz			
	Maximum current	A	12			
Appearance	Color		White			
	Material		Painted steel sheet			
Outer dimension	Height	mm	720			
	Width	mm	450			
	Depth	mm	235			
Unit weight		kg	27			
Packing dimension	Height	mm	846			
	Width	mm	534			
	Depth	mm	309			
Total weight	Unit and packing	kg	30			
Heat exchanger	Type		Brazed plate			
	Water volume	litres	0.9			
	Minimum flow rate	L/min	14			
Water pump	Power input (Max)	W	60			
	Delivery head	m	7.5			
Expansion vessel	Volume	litres	8			
	Initial pressure	Mpa (bar)	0.1 (1)			
Pressure relief valve	Operating pressure	Mpa (bar)	0.43 (4.3)			
Sound pressure level (Cooling/Heating)	MAX	dB(A)	29/29			
	Rated	dB(A)	29/29			
	Low noise	dB(A)	29/29			
Sound power level (Cooling/Heating)	MAX	dB(A)	40/40			
	Rated	dB(A)	40/40			
	Low noise	dB(A)	40/40			
Operation water Temp.	heating	°C	20-65			
	Cooling	°C	7-25			
Water pipe	Outlet	mm	25.4			
	Inlet	mm	25.4			
Refrigerant pipe	Gas	mm	15.9			
	Liquid	mm	6.4			
Drain port		mm	16.0 inner diameter for drain hose			
Note			* The electric heater, incorporated in the hot water cylinder, requires separate supply to hydro unit.			

Wall Mounted Type

Hydro unit			HWT-1401XWHM3W-E	HWT-1401XWHM6W-E	HWT-1401XWHT6W-E	HWT-1401XWHT9W-E
Back up heater	back up heater	kW	3.0	6.0	6.0	9.0
	Power supply		~ 220-240 V 50 Hz	~ 220-240 V 50 Hz	3N ~ 380-415 V 50 Hz	3N ~ 380-415 V 50 Hz
	Maximum current	A	13	26	13 (13A*2P)	13 (13A*3P)
Hot water cylinder heater*	Power supply		~ 220-240 V 50 Hz			
	Maximum current	A	12			
Appearance	Color		White			
	Material		Painted steel sheet			
Outer dimension	Height	mm	720			
	Width	mm	450			
	Depth	mm	235			
Unit weight		kg	28			
Packing dimension	Height	mm	846			
	Width	mm	534			
	Depth	mm	309			
Total weight	Unit and packing	kg	31			
Heat exchanger	Type		Brazed plate			
	Water volume	litres	1.3			
	Minimum flow rate	L/min	18			
Water pump	Power input (Max)	W	75			
	Delivery head	m	7.5			
Expansion vessel	Volume	litres	8			
	Initial pressure	Mpa (bar)	0.1 (1)			
Pressure relief valve	Operating pressure	Mpa (bar)	0.43 (4.3)			
Sound pressure level (Cooling/Heating)	MAX	dB(A)	35/35			
	Rated	dB(A)	33/33			
	Low noise	dB(A)	33/33			
Sound power level (Cooling/Heating)	MAX	dB(A)	45/45			
	Rated	dB(A)	43/43			
	Low noise	dB(A)	43/43			
Operation water Temp.	heating	°C	20-65			
	Cooling	°C	7-25			
Water pipe	Outlet	mm	R1"			
	Inlet	mm	R1"			
Refrigerant pipe	Gas	mm	15.9			
	Liquid	mm	6.4			
Drain port		mm	16.0 inner diameter for drain hose			
Note			* The electric heater, incorporated in the hot water cylinder, requires separate supply to hydro unit.			

All In One Type

Hydro unit			HWT-602S21SM3W-E	HWT-602S21SM6W-E	HWT-602S21ST6W-E
Back up heater	back up heater	kW	3.0	6.0	6.0
	Power supply		~ 220-240 V 50 Hz	~ 220-240 V 50 Hz	3N ~ 380-415 V 50 Hz
	Maximum current	A	13	26	13 (13A*2P)
Appearance	Color		White		
	Material		Painted steel sheet		
Outer dimension	Height	mm	1700		
	Width	mm	595		
	Depth	mm	670		
Unit weight		kg	116		
Packing dimension	Height	mm	1700		
	Width	mm	595		
	Depth	mm	670		
Total weight	Unit and packing	kg	131		
Heat exchanger	Type		Brazed plate		
	Water volume	litres	0.9		
	Minimum flow rate	L/min	11		
Water pump	Power input (Max)	W	75		
	Delivery head	m	7.5		
Expansion vessel	Volume	litres	10		
	Initial pressure	Mpa (bar)	0.05 (0.5)		
Pressure relief valve	Operating pressure	Mpa (bar)	0.25 (2.5)		
Sound pressure level (Cooling/Heating)	MAX	dB(A)	24/24		
	Rated	dB(A)	24/24		
	Low noise	dB(A)	24/24		
Sound power level (Cooling/Heating)	MAX	dB(A)	40/40		
	Rated	dB(A)	40/40		
	Low noise	dB(A)	40/40		
Operation water Temp.	heating	°C	20-55		
	Cooling	°C	7-25		
Water pipe	Outlet	mm	R3/4"		
	Inlet	mm	R3/4"		
Refrigerant pipe	Gas	mm	12.7		
	Liquid	mm	6.4		
Drain port		mm	16.0 inner diameter for drain hose		
Note			–		

All In One Type

Hydro unit			HWT-602S21MM3W-E	HWT-602S21MM6W-E	HWT-602S21MT6W-E
Back up heater	back up heater	kW	3.0	6.0	6.0
	Power supply		~ 220-240 V 50 Hz	~ 220-240 V 50 Hz	3N ~ 380-415 V 50 Hz
	Maximum current	A	13	26	13 (13A*2P)
Appearance	Color		White		
	Material		Painted steel sheet		
Outer dimension	Height	mm	1700		
	Width	mm	595		
	Depth	mm	670		
Unit weight		kg	122		
Packing dimension	Height	mm	1700		
	Width	mm	595		
	Depth	mm	670		
Total weight	Unit and packing	kg	137		
Heat exchanger	Type		Brazed plate		
	Water volume	litres	0.9		
	Minimum flow rate	L/min	11		
Water pump	Power input (Max)	W	75 × 2		
	Delivery head	m	7.5		
Expansion vessel	Volume	litres	10		
	Initial pressure	Mpa (bar)	0.05 (0.5)		
Pressure relief valve	Operating pressure	Mpa (bar)	0.25 (2.5)		
Sound pressure level (Cooling/Heating)	MAX	dB(A)	30/30		
	Rated	dB(A)	30/30		
	Low noise	dB(A)	30/30		
Sound power level (Cooling/Heating)	MAX	dB(A)	45/45		
	Rated	dB(A)	45/45		
	Low noise	dB(A)	45/45		
Operation water Temp.	heating	°C	20-55		
	Cooling	°C	7-25		
Water pipe	Outlet	mm	R3/4"		
	Inlet	mm	R3/4"		
Refrigerant pipe	Gas	mm	12.7		
	Liquid	mm	6.4		
Drain port		mm	16.0 inner diameter for drain hose		
Note			–		

All In One Type

Hydro unit			HWT-1102S21SM3W-E	HWT-1102S21SM6W-E	HWT-1102S21ST6W-E	HWT-1102S21ST9W-E
Back up heater	back up heater	kW	3.0	6.0	6.0	9.0
	Power supply		~ 220-240 V 50 Hz	~ 220-240 V 50 Hz	3N ~ 380-415 V 50 Hz	3N ~ 380-415 V 50 Hz
	Maximum current	A	13	13 (13A*2P)	13 (13A*2P)	13 (13A*3P)
Appearance	Color		White			
	Material		Painted steel sheet			
Outer dimension	Height	mm	1700			
	Width	mm	595			
	Depth	mm	670			
Unit weight		kg	116			
Packing dimension	Height	mm	1700			
	Width	mm	595			
	Depth	mm	670			
Total weight	Unit and packing	kg	131			
Heat exchanger	Type		Brazed plate			
	Water volume	litres	0.9			
	Minimum flow rate	L/min	14			
Water pump	Power input (Max)	W	75			
	Delivery head	m	7.5			
Expansion vessel	Volume	litres	10			
	Initial pressure	Mpa (bar)	0.05 (0.5)			
Pressure relief valve	Operating pressure	Mpa (bar)	0.25 (2.5)			
Sound pressure level (Cooling/Heating)	MAX	dB(A)	24/24			
	Rated	dB(A)	24/24			
	Low noise	dB(A)	24/24			
Sound power level (Cooling/Heating)	MAX	dB(A)	40/40			
	Rated	dB(A)	40/40			
	Low noise	dB(A)	40/40			
Operation water Temp.	heating	°C	20-65			
	Cooling	°C	7-25			
Water pipe	Outlet	mm	R3/4"			
	Inlet	mm	R3/4"			
Refrigerant pipe	Gas	mm	15.9			
	Liquid	mm	6.4			
Drain port		mm	16.0 inner diameter for drain hose			
Note			–			

All In One Type

Hydro unit			HWT-1102S21MM3W-E	HWT-1102S21MT6W-E	HWT-1102S21MT6W-E	HWT-1102S21MT9W-E
Back up heater	back up heater	kW	3.0	6.0	6.0	9.0
	Power supply		~ 220-240 V 50 Hz	~ 220-240 V 50 Hz	3N ~ 380-415 V 50 Hz	3N ~ 380-415 V 50 Hz
	Maximum current	A	13	13 (13A*2P)	13 (13A*2P)	13 (13A*3P)
Appearance	Color		White			
	Material		Painted steel sheet			
Outer dimension	Height	mm	1700			
	Width	mm	595			
	Depth	mm	670			
Unit weight		kg	122			123
Packing dimension	Height	mm	1700			
	Width	mm	595			
	Depth	mm	670			
Total weight	Unit and packing	kg	131			
Heat exchanger	Type		Brazed plate			
	Water volume	litres	0.9			
	Minimum flow rate	L/min	14			
Water pump	Power input (Max)	W	75 × 2			
	Delivery head	m	7.5			
Expansion vessel	Volume	litres	10			
	Initial pressure	Mpa (bar)	0.05 (0.5)			
Pressure relief valve	Operating pressure	Mpa (bar)	0.25 (2.5)			
Sound pressure level (Cooling/Heating)	MAX	dB(A)	30/30			
	Rated	dB(A)	30/30			
	Low noise	dB(A)	30/30			
Sound power level (Cooling/Heating)	MAX	dB(A)	45/45			
	Rated	dB(A)	45/45			
	Low noise	dB(A)	45/45			
Operation water Temp.	heating	°C	20-65			
	Cooling	°C	7-25			
Water pipe	Outlet	mm	R3/4"			
	Inlet	mm	R3/4"			
Refrigerant pipe	Gas	mm	15.9			
	Liquid	mm	6.4			
Drain port		mm	16.0 inner diameter for drain hose			
Note			–			

All In One Type

Hydro unit			HWT-1402S21SM3W-E	HWT-1402S21SM6W-E	HWT-1402S21ST6W-E	HWT-1402S21ST9W-E
Back up heater	back up heater	kW	3.0	6.0	6.0	9.0
	Power supply		~ 220-240 V 50 Hz	~ 220-240 V 50 Hz	3N ~ 380-415 V 50 Hz	3N ~ 380-415 V 50 Hz
	Maximum current	A	13	13 (13A*2P)	13 (13A*2P)	13 (13A*3P)
Appearance	Color		White			
	Material		Painted steel sheet			
Outer dimension	Height	mm	1700			
	Width	mm	595			
	Depth	mm	670			
Unit weight		kg	117			
Packing dimension	Height	mm	1700			
	Width	mm	595			
	Depth	mm	670			
Total weight	Unit and packing	kg	132			
Heat exchanger	Type		Brazed plate			
	Water volume	litres	1.3			
	Minimum flow rate	L/min	18			
Water pump	Power input (Max)	W	130			
	Delivery head	m	10.5			
Expansion vessel	Volume	litres	10			
	Initial pressure	Mpa (bar)	0.05 (0.5)			
Pressure relief valve	Operating pressure	Mpa (bar)	0.25 (2.5)			
Sound pressure level (Cooling/Heating)	MAX	dB(A)	24/24			
	Rated	dB(A)	24/24			
	Low noise	dB(A)	24/24			
Sound power level (Cooling/Heating)	MAX	dB(A)	40/40			
	Rated	dB(A)	40/40			
	Low noise	dB(A)	40/40			
Operation water Temp.	heating	°C	20-65			
	Cooling	°C	7-25			
Water pipe	Outlet	mm	R3/4"			
	Inlet	mm	R3/4"			
Refrigerant pipe	Gas	mm	15.9			
	Liquid	mm	6.4			
Drain port		mm	16.0 inner diameter for drain hose			
Note			–			

All In One Type

Hydro unit			HWT-1402S21MM3W-E	HWT-1402S21MT6W-E	HWT-1402S21MT6W-E	HWT-1402S21MT9W-E
Back up heater	back up heater	kW	3.0	6.0	6.0	9.0
	Power supply		~ 220-240 V 50 Hz	~ 220-240 V 50 Hz	3N ~ 380-415 V 50 Hz	3N ~ 380-415 V 50 Hz
	Maximum current	A	13	13 (13A*2P)	13 (13A*2P)	13 (13A*3P)
Appearance	Color		White			
	Material		Painted steel sheet			
Outer dimension	Height	mm	1700			
	Width	mm	595			
	Depth	mm	670			
Unit weight		kg	123			124
Packing dimension	Height	mm	1700			
	Width	mm	595			
	Depth	mm	670			
Total weight	Unit and packing	kg	132			139
Heat exchanger	Type		Brazed plate			
	Water volume	litres	1.3			
	Minimum flow rate	L/min	18			
Water pump	Power input (Max)	W	130 (Pump for 1zone), 75 (Pump for 2zone)			
	Delivery head	m	10.5 (Pump for 1zone), 7.5 (Pump for 2zone)			
Expansion vessel	Volume	litres	10			
	Initial pressure	Mpa (bar)	0.05 (0.5)			
Pressure relief valve	Operating pressure	Mpa (bar)	0.25 (2.5)			
Sound pressure level (Cooling/Heating)	MAX	dB(A)	24/24			
	Rated	dB(A)	24/24			
	Low noise	dB(A)	24/24			
Sound power level (Cooling/Heating)	MAX	dB(A)	40/40			
	Rated	dB(A)	40/40			
	Low noise	dB(A)	40/40			
Operation water Temp.	heating	°C	20-65			
	Cooling	°C	7-25			
Water pipe	Outlet	mm	R3/4"			
	Inlet	mm	R3/4"			
Refrigerant pipe	Gas	mm	15.9			
	Liquid	mm	6.4			
Drain port		mm	16.0 inner diameter for drain hose			
Note			–			

2-1-2. Electrical supply / cable specifications

Wall Mounted Type

▼Wiring specifications

Description		Model name HWT-	POWER SUPPLY	Maximum current	Installation fuse rating	Power wire	Connection destination	
Outdoor Unit power	Power input	1401H(R)W-E	220-240 V ~ 50 Hz	28.8 A	32 A	4 mm² or more	Ⓛ, Ⓝ	
		1101H(R)W-E	220-240 V ~ 50 Hz	20.3 A	25 A	2.5 mm² or more	Ⓛ, Ⓝ	
		801H(R)W-E	220-240 V ~ 50 Hz	20.3 A	25 A	2.5 mm² or more		
		601HW-E	220-240 V ~ 50 Hz	14.6 A	16 A	1.5 mm² or more		
		401HW-E	220-240 V ~ 50 Hz	14.6 A	16 A	1.5 mm² or more		
		801H8(R)W-E	380-415 V 3N ~ 50 Hz	13.0 A	16 A	2.5 mm² or more	Ⓛ1, Ⓛ2, Ⓛ3, Ⓝ	
		1101H8(R)W-E	380-415 V 3N ~ 50 Hz	13.0 A	16 A	2.5 mm² or more		
		1401H8(R)W-E	380-415 V 3N ~ 50 Hz	13.0 A	16 A	2.5 mm² or more		
Hydro inlet heater power	Power input for backup heater	1401XWHM3W-E	220-240 V ~ 50 Hz	13 A	16 A	1.5 mm² or more	Ⓛ, Ⓝ	TB03
		1401XWHM6W-E	220-240 V ~ 50 Hz	26 A	32 A	6 mm² or more		
		1401XWHT6W-E	380-415 V 3N ~ 50 Hz	13 A (13 A x 2P)	16 A	1.5 mm² or more	Ⓛ1, Ⓛ2, Ⓛ3, Ⓝ	
		1401XWHT9W-E	380-415 V 3N ~ 50 Hz	13 A (13 A x 3P)	16 A	1.5 mm² or more		
		1101XWHM3W-E	220-240 V ~ 50 Hz	13 A	16 A	1.5 mm² or more	Ⓛ, Ⓝ	
		1101XWHM6W-E	220-240 V ~ 50 Hz	26 A	32 A	6 mm² or more	Ⓛ, Ⓝ	
		1101XWHT6W-E	380-415 V 3N~ 50 Hz	13 A (13 A x 2P)	16 A	1.5 mm² or more	Ⓛ1, Ⓛ2, Ⓛ3, Ⓝ	
		1101XWHT9W-E	380-415 V 3N~ 50 Hz	13 A (13 A x 3P)	16 A	1.5 mm² or more		
		601XWHM3W-E	220-240 V ~ 50 Hz	13 A	16 A	1.5 mm² or more	Ⓛ, Ⓝ	
		601XWHM6W-E	220-240 V ~ 50 Hz	26 A	32 A	6 mm² or more	Ⓛ, Ⓝ	
		601XWHT6W-E	380-415 V 3N ~ 50 Hz	13 A (13 A x 2P)	16 A	1.5 mm² or more	Ⓛ1, Ⓛ2, Ⓛ3, Ⓝ	
	Power input for cylinder heater		220-240 V ~ 50 Hz	12 A	16 A	1.5 mm² or more	Ⓛ, Ⓝ	TB02
Outdoor-Hydro Unit		Connection				1.5 mm² or more	①, ②, ③	TB01
Hydro-Cylinder		Connection				1.5 mm² or more	①, ②	TB02

▼Wiring specifications (control line)

Description	Line spec	Maximum current	Maximum length	Power wire	Connection destination
3-way valve control	2 line or 3 line	100 mA	12 m	0.75 mm² or more	⑧, ⑨, ⑩ (CN23)
2-way valve control	2 line	100 mA	12 m	0.75 mm² or more	③, ④ (CN23)
Mixing valve control	3 line	100 mA	12 m	0.75 mm² or more	⑧, ⑨, ⑩ (CN22)
2-zone thermo sensor	2 line	100 mA	5 m	0.75 mm² or more	③, ④ (CN20)
Cylinder thermo sensor	2+GND(shielded wire)	100 mA	5 m	0.75 mm² or more	①, ② (CN20)
Second remote controller	2 line	50 mA	50 m	0.5 mm² or more	(TB04)
Group control (total)	2 line	50 mA	50 m	0.5 mm² or more	(TB04)
Open protocol interface	2 line	100 mA	50 m	0.5 mm² or more	(TB04)

▼Control parts specifications

	Power	Maximum current	Type
Motorized 3-way valve (for hot water)	AC 230 V	100 mA	Default: 2-wire spring return valve or 3 wire SPST valve Note: 3 wire SPDT valve can be used by changing DN 6B4.
Motorized 2-way valve (for cooling)	AC 230 V	100 mA	spring return type (normally open)
Motorized mixing valve (for 2-zone)	AC 230 V	100 mA	Default: Drive time = 60sec to 90° Note: 3 wire SPST or SPDT valves, with drive times between 30 and 240 seconds, can be used. Valve drive time can be changed using DN 0C

▼Output line specifications

Description	Output	Maximum current	Max voltage	Maximum length	
External pump No.1	AC230 V	1 A	–	12 m	
External boost heater	AC230 V	1 A	–	12 m	Output as required when outdoor air temperature is -20 °C or less
Digital outputs from CN22	Non-voltage contacts	0.5 A	AC230 V	12 m	
		1 A	DC24 V	12 m	

▼Input line specifications

Description	Input	Maximum length
Digital inputs to CN21	Non-voltage	12 m

All In One Type

▼Wiring specifications

Description		Model name HWT-	POWER SUPPLY	Maximum current	Installation fuse rating	Power wire	Connection destination	
Outdoor Unit power	Power input	1401H(R)W-E	220-240 V ~ 50 Hz	28.8 A	32 A	4 mm² or more	Ⓛ, Ⓝ	
		1101H(R)W-E	220-240 V ~ 50 Hz	20.3 A	25 A	2.5 mm² or more	Ⓛ, Ⓝ	
		801H(R)W-E	220-240 V ~ 50 Hz	20.3 A	25 A	2.5 mm² or more		
		601HW-E	220-240 V ~ 50 Hz	14.6 A	16 A	1.5 mm² or more		
		401HW-E	220-240 V ~ 50 Hz	14.6 A	16 A	1.5 mm² or more		
		801H8(R)W-E	380-415 V 3N~ 50 Hz	13.0 A	16 A	2.5 mm² or more	Ⓛ1, Ⓛ2, Ⓛ3, Ⓝ	
		1101H8(R)W-E	380-415 V 3N~ 50 Hz	13.0 A	16 A	2.5 mm² or more		
		1401H8(R)W-E	380-415 V 3N~ 50 Hz	13.0 A	16 A	2.5 mm² or more		
Hydro inlet heater power	Power input for backup heater	1402S21SM3W-E	220-240 V ~ 50 Hz	13 A	16 A	1.5 mm² or more	Ⓛ, Ⓝ	TB03
		1402S21MM3W-E						
		1402S21SM6W-E	220-240 V ~ 50 Hz	26 A	32 A	6 mm² or more		
		1402S21MM6W-E						
		1402S21ST6W-E	380-415 V 3N ~ 50 Hz	13 A (13 A x 2P)	16 A	1.5 mm² or more	Ⓛ1, Ⓛ2, Ⓛ3, Ⓝ	
		1402S21MT6W-E						
		1402S21ST9W-E	380-415 V 3N ~ 50 Hz	13 A (13 A x 3P)	16 A	1.5 mm² or more		
		1402S21MT9W-E						
		1102S21SM3W-E	220-240 V ~ 50 Hz	13 A	16 A	1.5 mm² or more	Ⓛ, Ⓝ	
		1102S21MM3W-E						
		1102S21SM6W-E	220-240 V ~ 50 Hz	26 A	32 A	6 mm² or more		
		1102S21MM6W-E						
		1102S21ST6W-E	380-415 V 3N ~ 50 Hz	13 A (13 A x 2P)	16 A	1.5 mm² or more	Ⓛ1, Ⓛ2, Ⓛ3, Ⓝ	
		1102S21MT6W-E						
		1102S21ST9W-E	380-415 V 3N ~ 50 Hz	13 A (13 A x 3P)	16 A	1.5 mm² or more		
		1102S21MT9W-E						
		602S21SM3W-E	220-240 V ~ 50 Hz	13 A	16 A	1.5 mm² or more	Ⓛ, Ⓝ	
		602S21MM3W-E						
		602S21SM6W-E	220-240 V ~ 50 Hz	26 A	32 A	6 mm² or more		
		602S21MM6W-E						
		602S21ST6W-E	380-415 V 3N ~ 50 Hz	13 A (13 A x 2P)	16 A	1.5 mm² or more	Ⓛ1, Ⓛ2, Ⓛ3, Ⓝ	
		602S21MT6W-E						

▼ Wiring specifications (control line)

Description	Line spec	Maximum current	Maximum length	Power wire	Connection destination
2-way valve control	2 line	100 mA	12 m	0.75 mm² or more	③, ④ (CN23)
Second remote controller	2 line	50 mA	50 m	0.5 mm² or more	(TB04)
Group control (total)	2 line	50 mA	50 m	0.5 mm² or more	(TB04)
Open protocol interface	2 line	100 mA	50 m	0.5 mm² or more	(TB04)

▼ Control parts specifications

	Power	Maximum current	Type
Motorized 2-way valve (for cooling)	AC 230 V	100 mA	spring return type (normally open)

▼ Output line specifications

Description	Output	Maximum current	Max voltage	Maximum length	
External boost heater	AC230 V	1 A	–	12 m	Output as required when outdoor air temperature is -20 °C or less
Digital outputs from CN22	Non-voltage contacts	0.5 A	AC230 V	12 m	
		1 A	DC24 V	12 m	

▼ Input line specifications

Description	Input	Maximum length
Digital inputs to CN21	Non-voltage	12 m

2-2. Dimension

Hydro unit - Wall Mounted Type

HWT-601XWHM3W-E, HWT-601XWHM6W-E, HWT-601XWHT6W-E
HWT-1101XWHM3W-E, HWT-1101XWHM6W-E, HWT-1101XWHT6W-E
HWT-1101XWHT9W-E, HWT-1401XWHM3W-E, HWT-1401XWHM6W-E
HWT-1401XWHT6W-E, HWT-1401XWHT9W-E

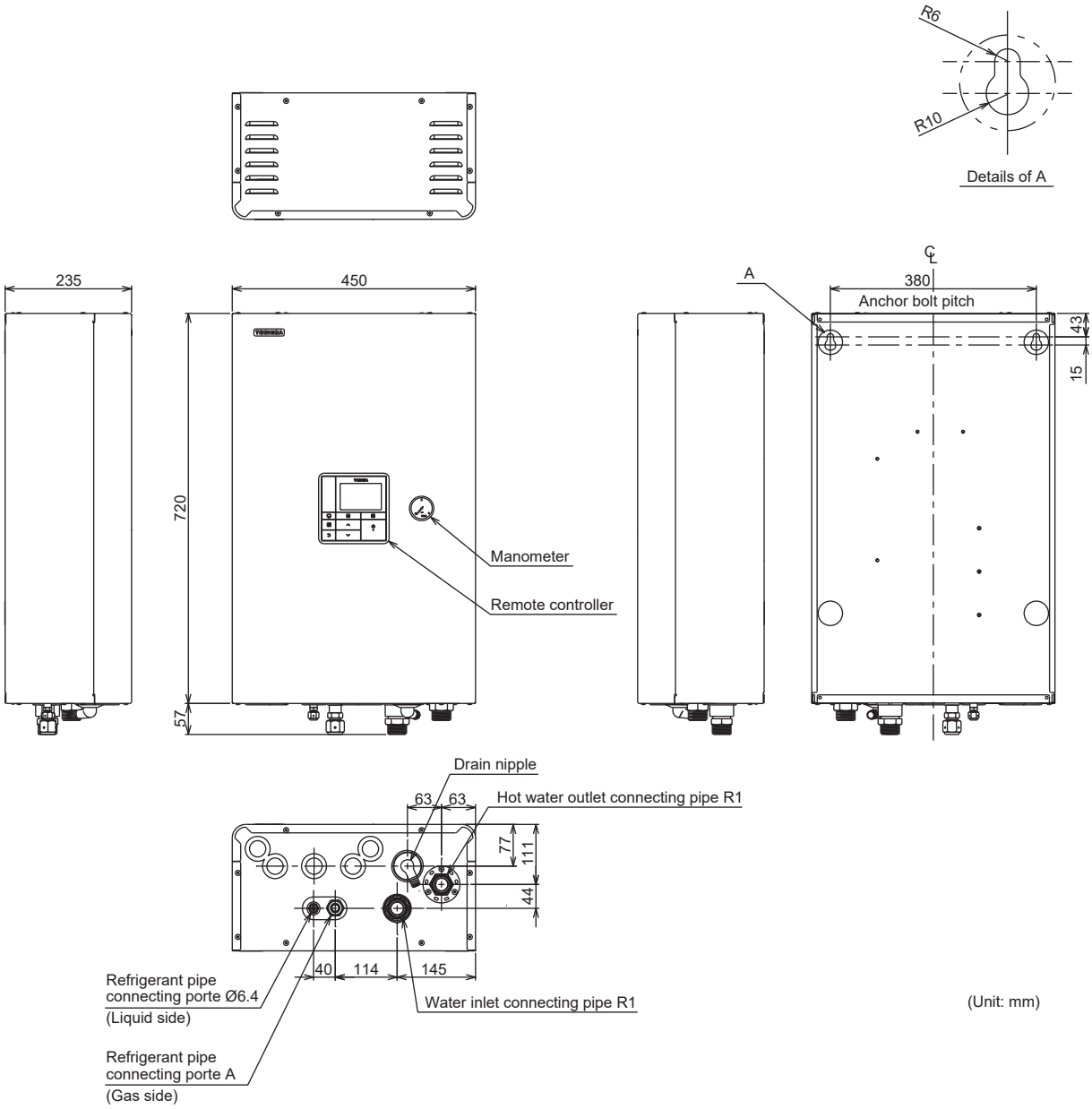

(Unit: mm)

Model name	A
HWT-601	Ø12.7
HWT-1101	Ø15.9
HWT-1401	Ø15.9

Hydro unit - All In One Type

HWT-602S21SM3W-E, HWT-602S21SM6W-E, HWT-602S21ST6W-E, HWT-602S21MM3W-E HWT-602S21MM6W-E, HWT-602S21MT6W-E, HWT-1102S21SM3W-E, HWT-1102S21SM6W-E HWT-1102S21ST6W-E, HWT-1102S21ST9W-E, HWT-1102S21MM3W-E, HWT-1102S21MM6W-E HWT-1102S21MT6W-E, HWT-1102S21MT9W-E, HWT-1402S21SM3W-E, HWT-1402S21SM6W-E HWT-1402S21ST6W-E, HWT-1402S21ST9W-E, HWT-1402S21MM3W-E, HWT-1402S21MM6W-E HWT-1402S21MT6W-E, HWT-1402S21MT9W-E

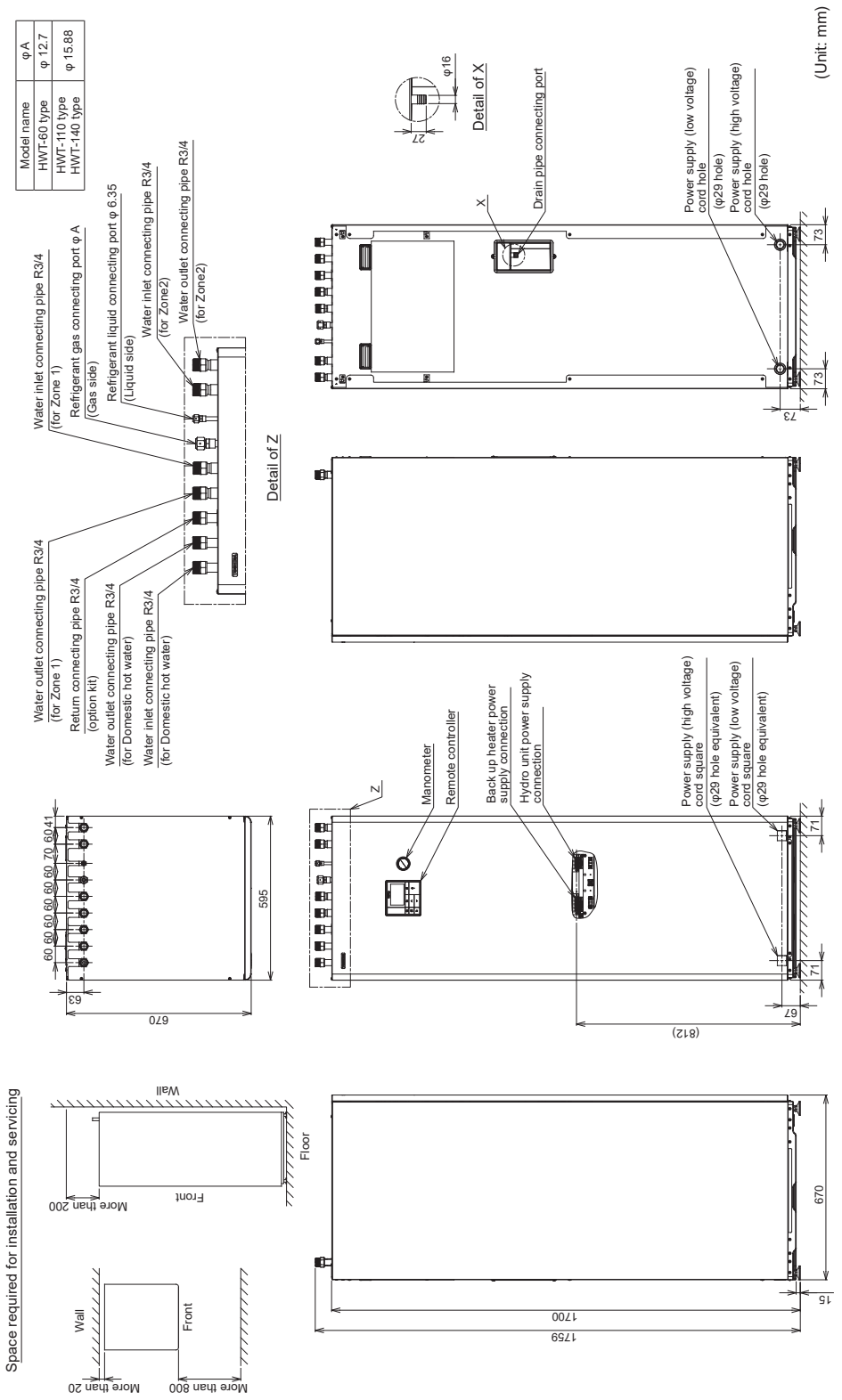

2-3. Piping Diagram

Water system diagram - Wall Mounted Type

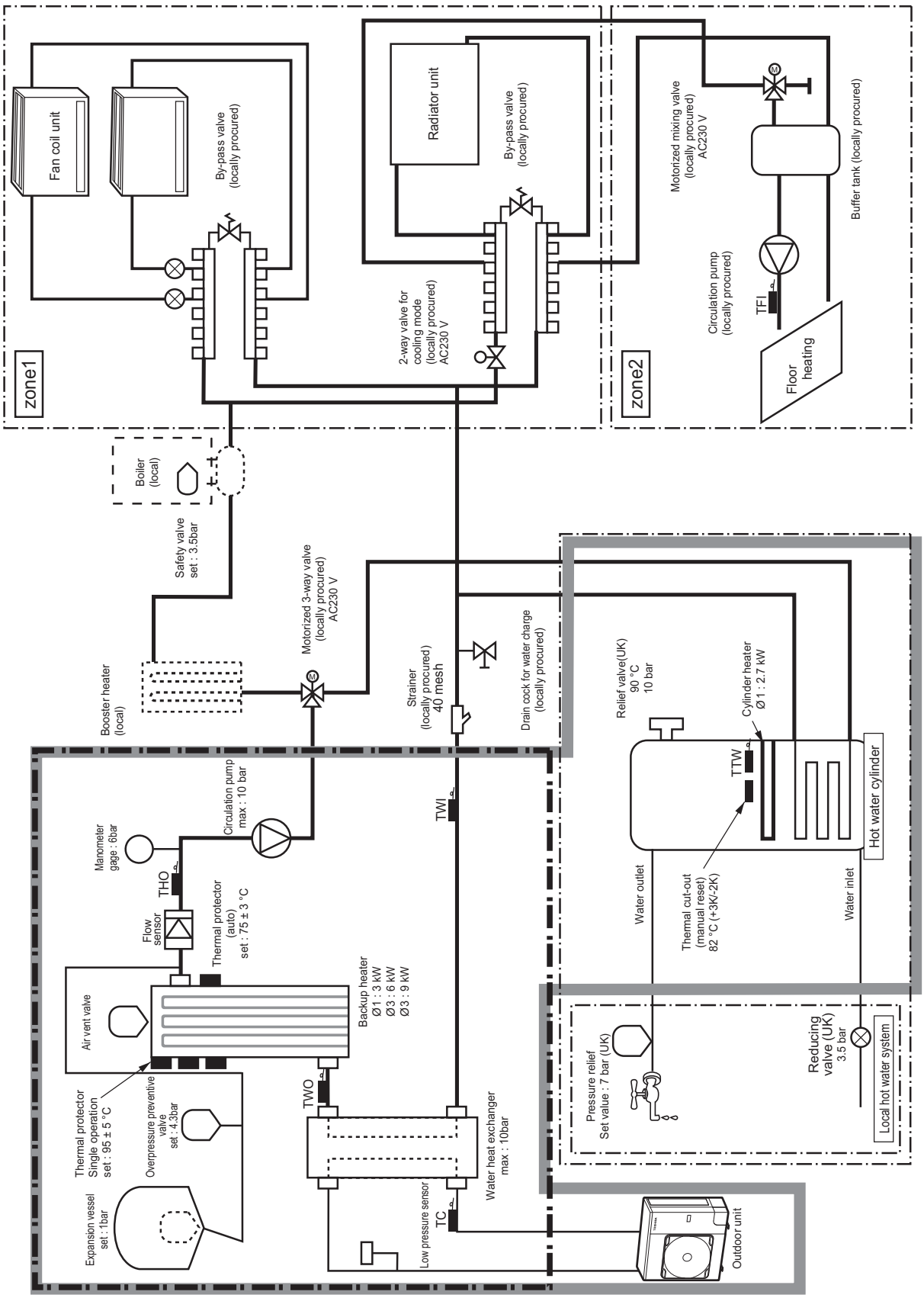

Refrigeration cycle system diagram - Wall Mounted Type

HWT-601XWH**W-E
HWT-401HW-E, HWT-601HW-E

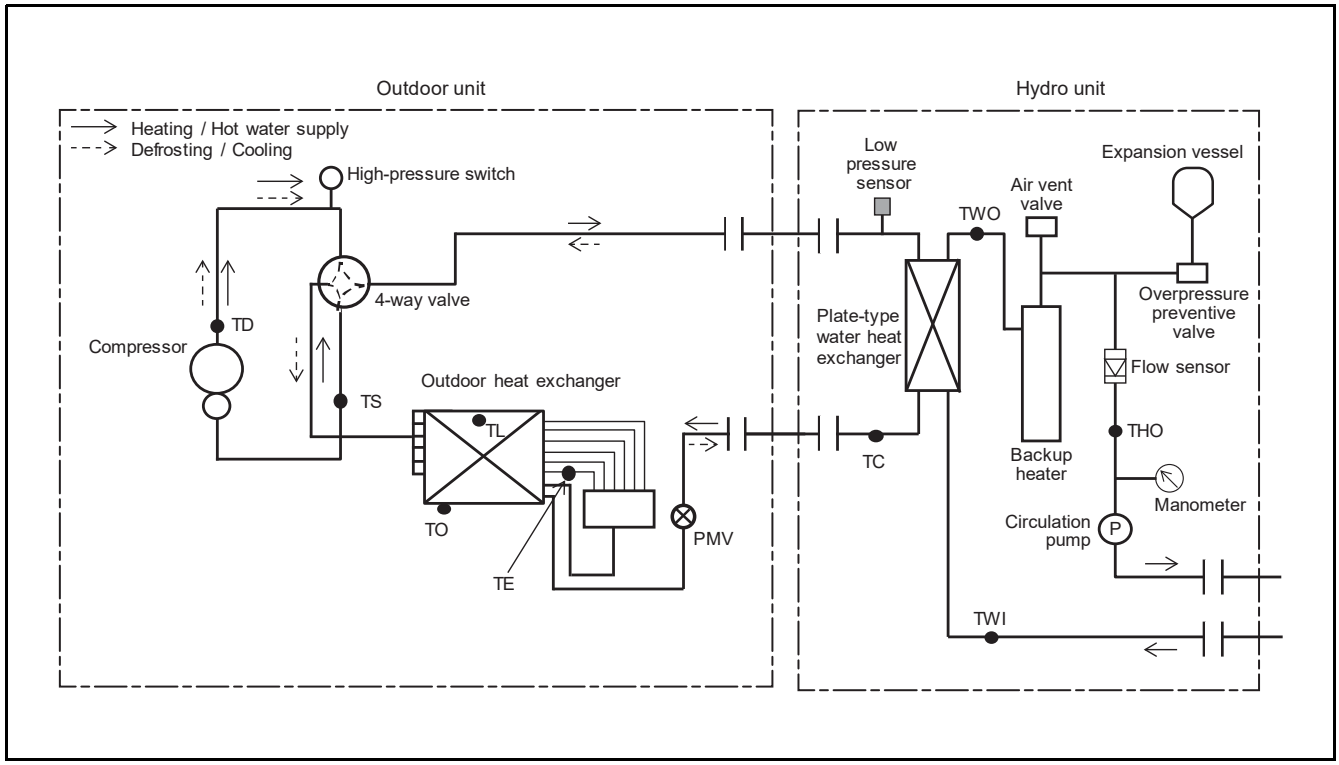

HWT-1101XWH**W-E, HWT-1401XWH**W-E
HWT-801H(R)W-E, HWT-1101H(R)W-E, HWT-1401H(R)W-E
HWT-801H8(R)W-E, HWT-1101H8(R)W-E, HWT-1401H8(R)W-E

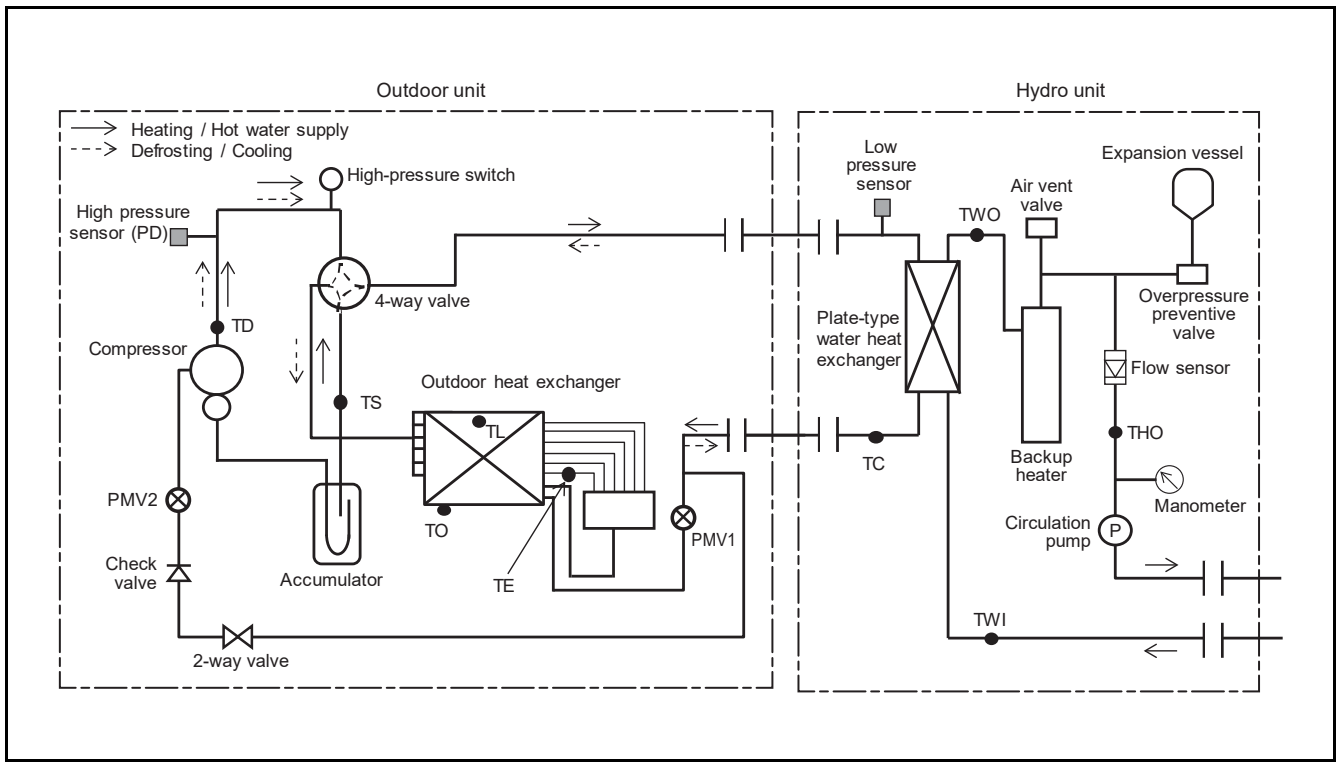

Water system diagram - All In One Type

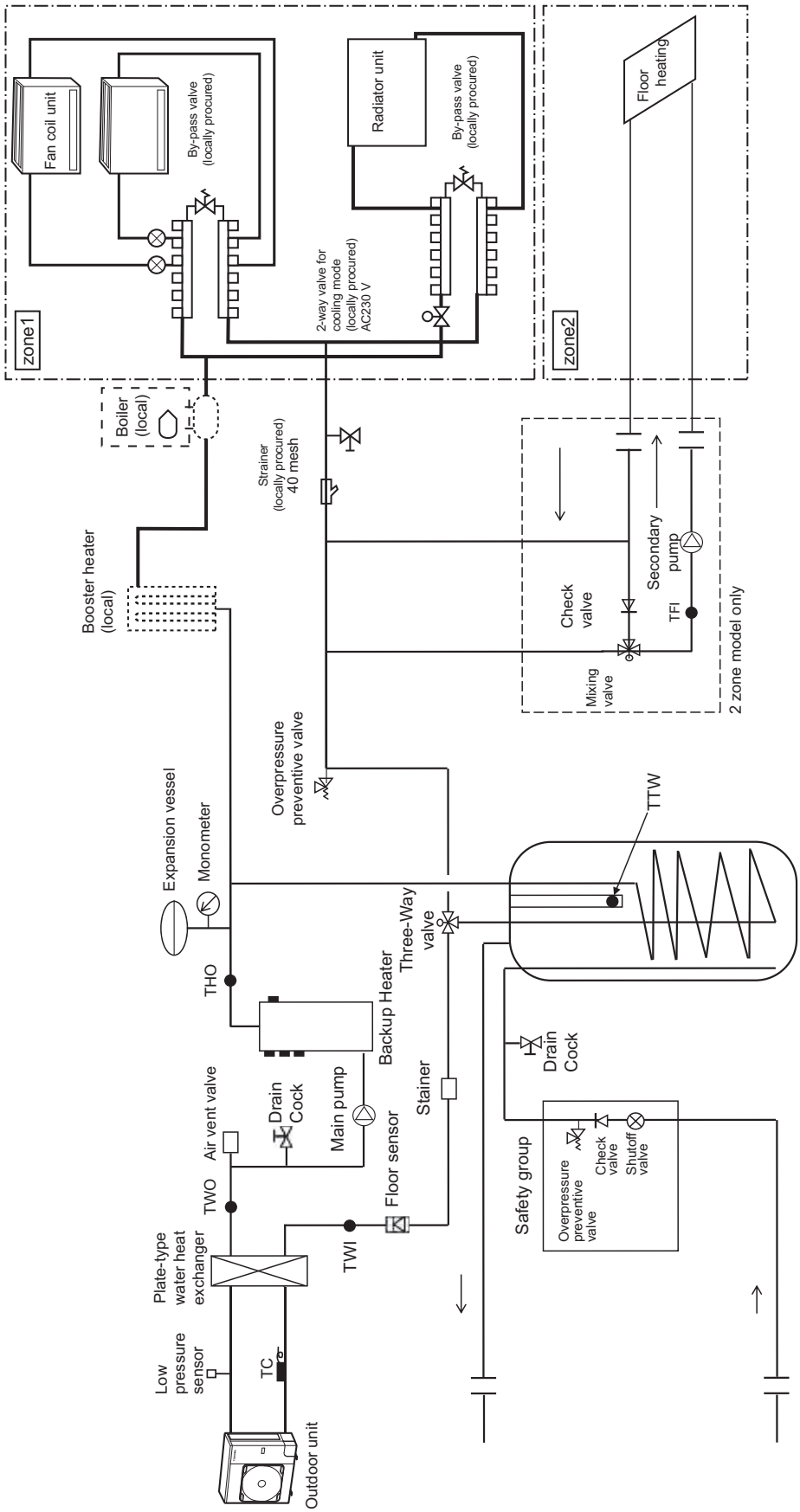

Refrigeration cycle system diagram - All In One Type

HWT-602S21***W-E
HWT-401HW-E, HWT-601HW-E

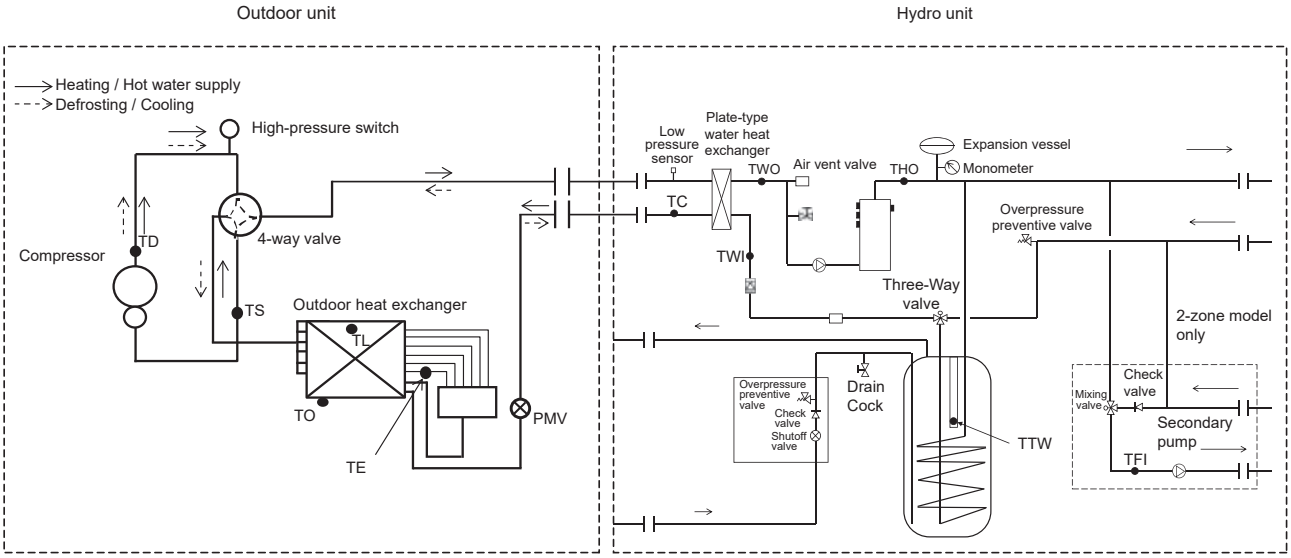

HWT-1102S21***W-E, HWT-1402S21***W-E
HWT-801H(R)W-E, HWT-1101H(R)W-E, HWT-1401H(R)W-E
HWT-801H8(R)W-E, HWT-1101H8(R)W-E, HWT-1401H8(R)W-E

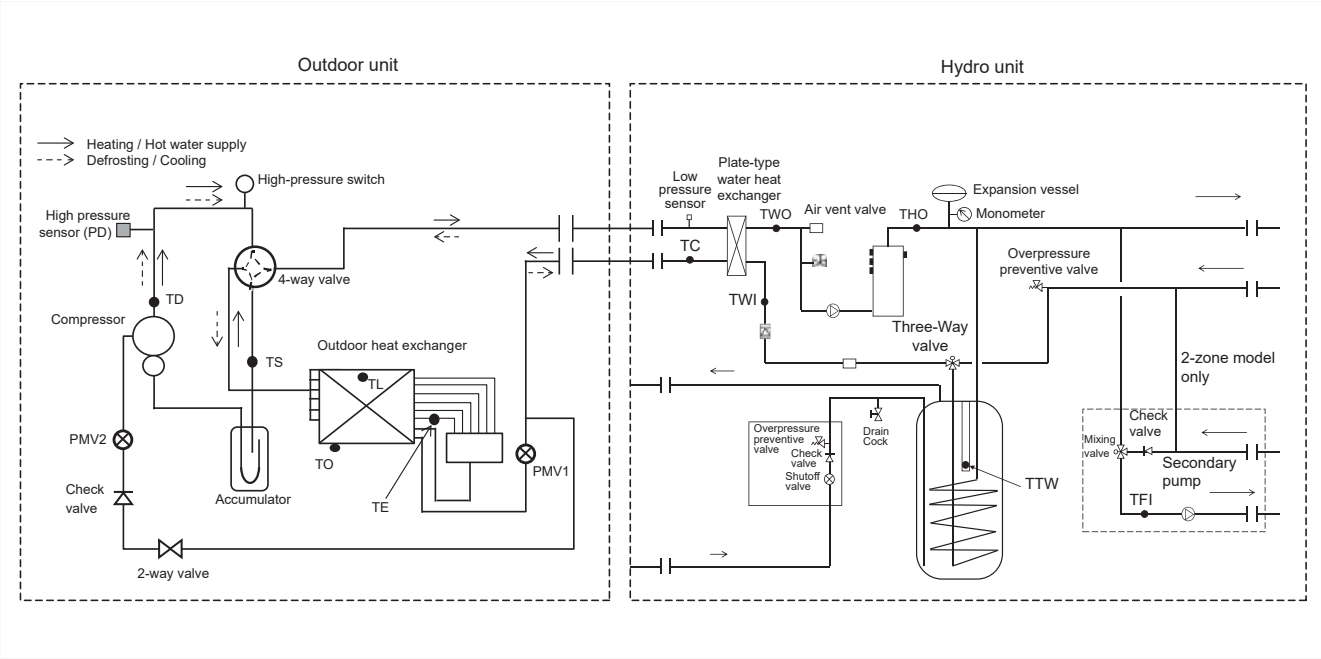

2-4. Wiring Diagram

2-4-1. Wiring Diagram

Hydro unit - Wall Mounted Type

HWT-601XWHM3W-E, HWT-601XWHM6W-E, HWT-601XWHT6W-E
HWT-1101XWHM3W-E, HWT-1101XWHM6W-E, HWT-1101XWHT6W-E
HWT-1101XWHT9W-E, HWT-1401XWHM3W-E, HWT-1401XWHM6W-E
HWT-1401XWHT6W-E, HWT-1401XWHT9W-E

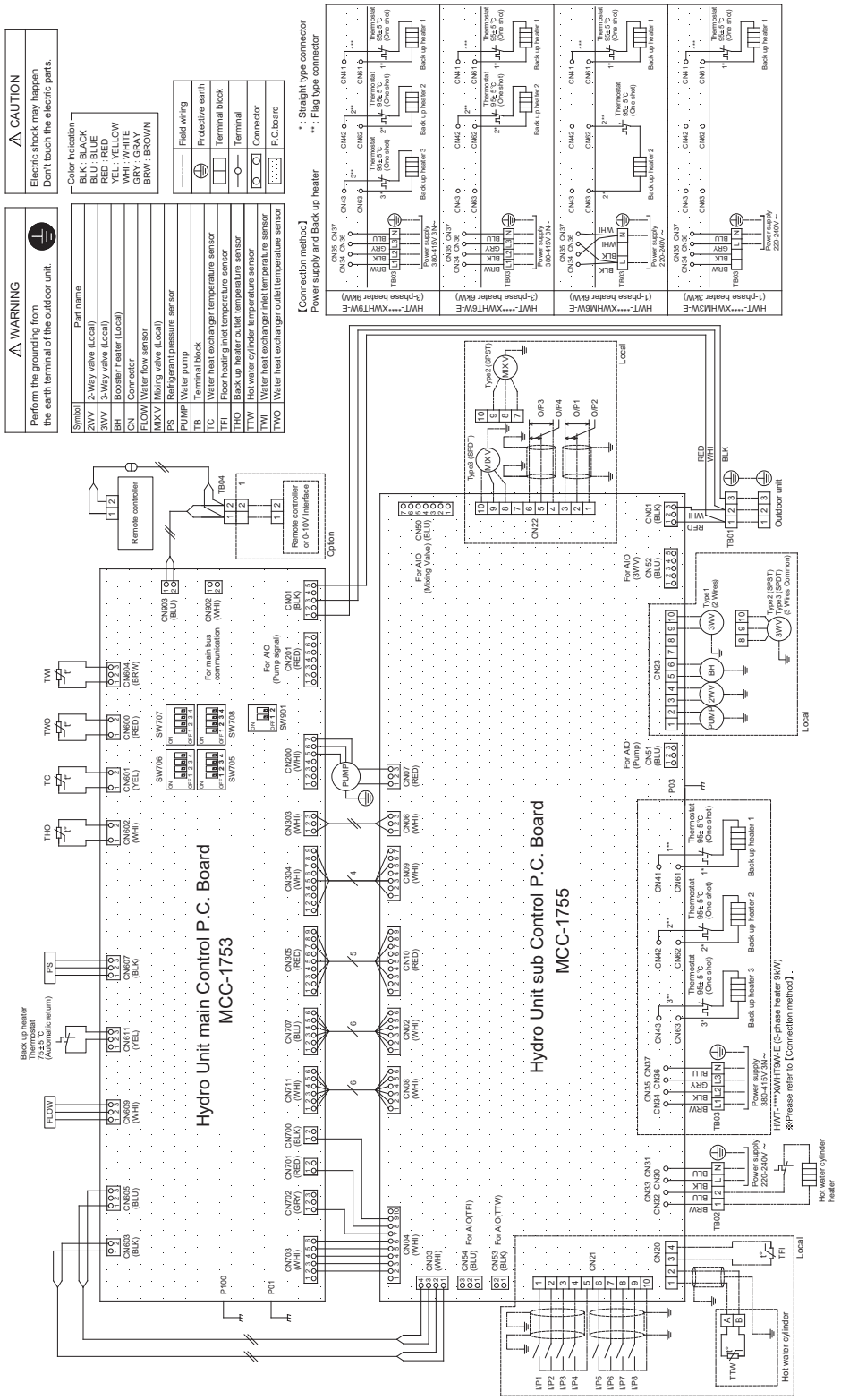

Hydro unit - All In One Type

HWT-602S21SM3W-E, HWT-602S21SM6W-E, HWT-602S21ST6W-E
HWT-1102S21SM3W-E, HWT-1102S21SM6W-E, HWT-1102S21ST6W-E
HWT-1102S21ST9W-E, HWT-1102S21MM3W-E, HWT-1102S21MM6W-E
HWT-1102S21MT6W-E, HWT-1102S21MT9W-E

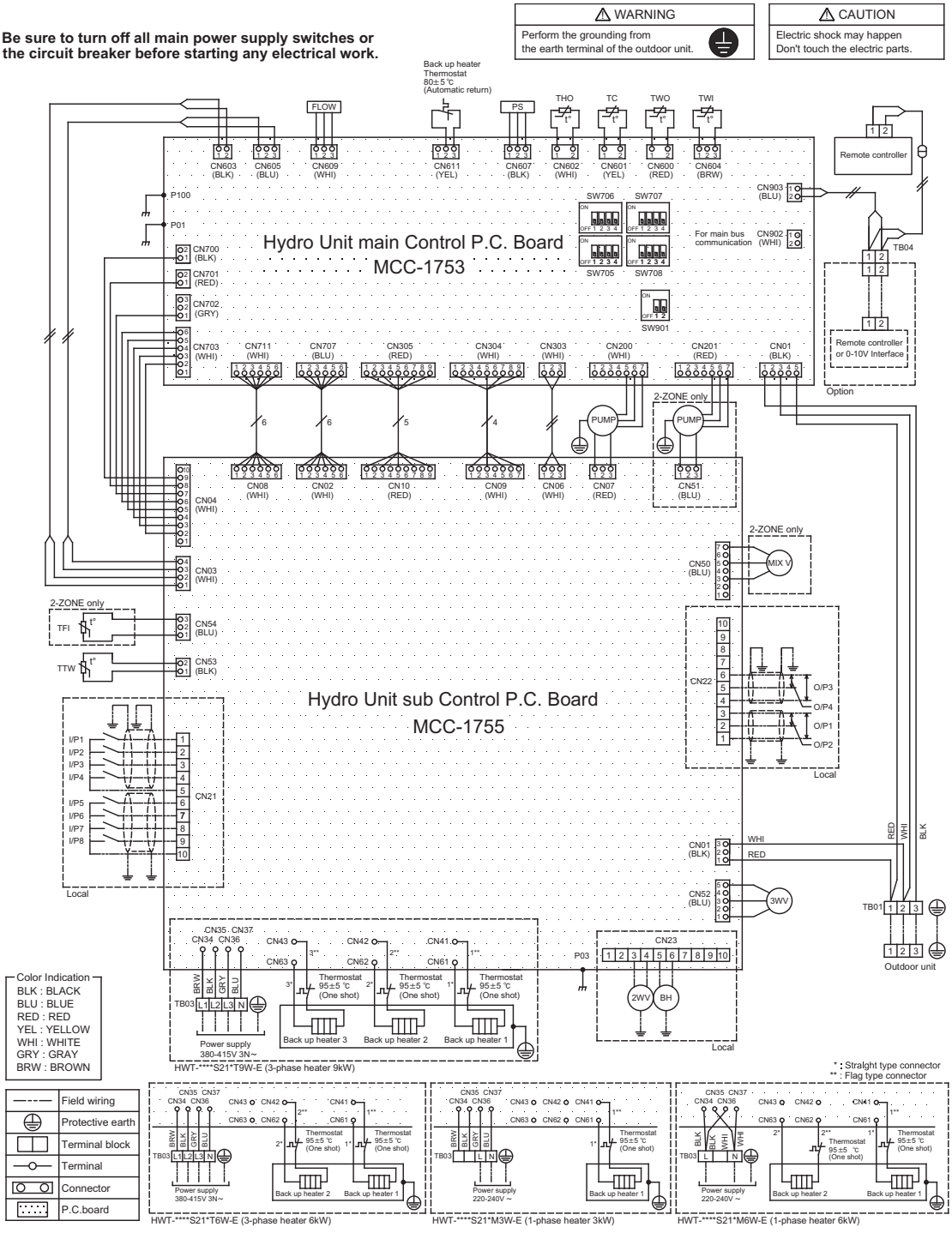

Symbol	Part name	Symbol	Part name
2WV	2-Way valve (Local)	TB	Terminal block
3WV	3-Way valve	TC	Water heat exchanger temperature sensor
BH	Booster heater (Local)	TFI	Floor heating inlet temperature sensor
CN	Connector	THO	Back up heater outlet temperature sensor
FLOW	Water flow sensor	TTW	Hot water cylinder temperature sensor
MIX V	Mixing valve	TWI	Water heat exchanger inlet temperature sensor
PS	Refrigerant pressure sensor	TWO	Water heat exchanger outlet temperature sensor
PUMP	Water pump		

Hydro unit - All In One Type

HWT-602S21MM3W-E, HWT-602S21MM6W-E, HWT-602S21MT6W-E

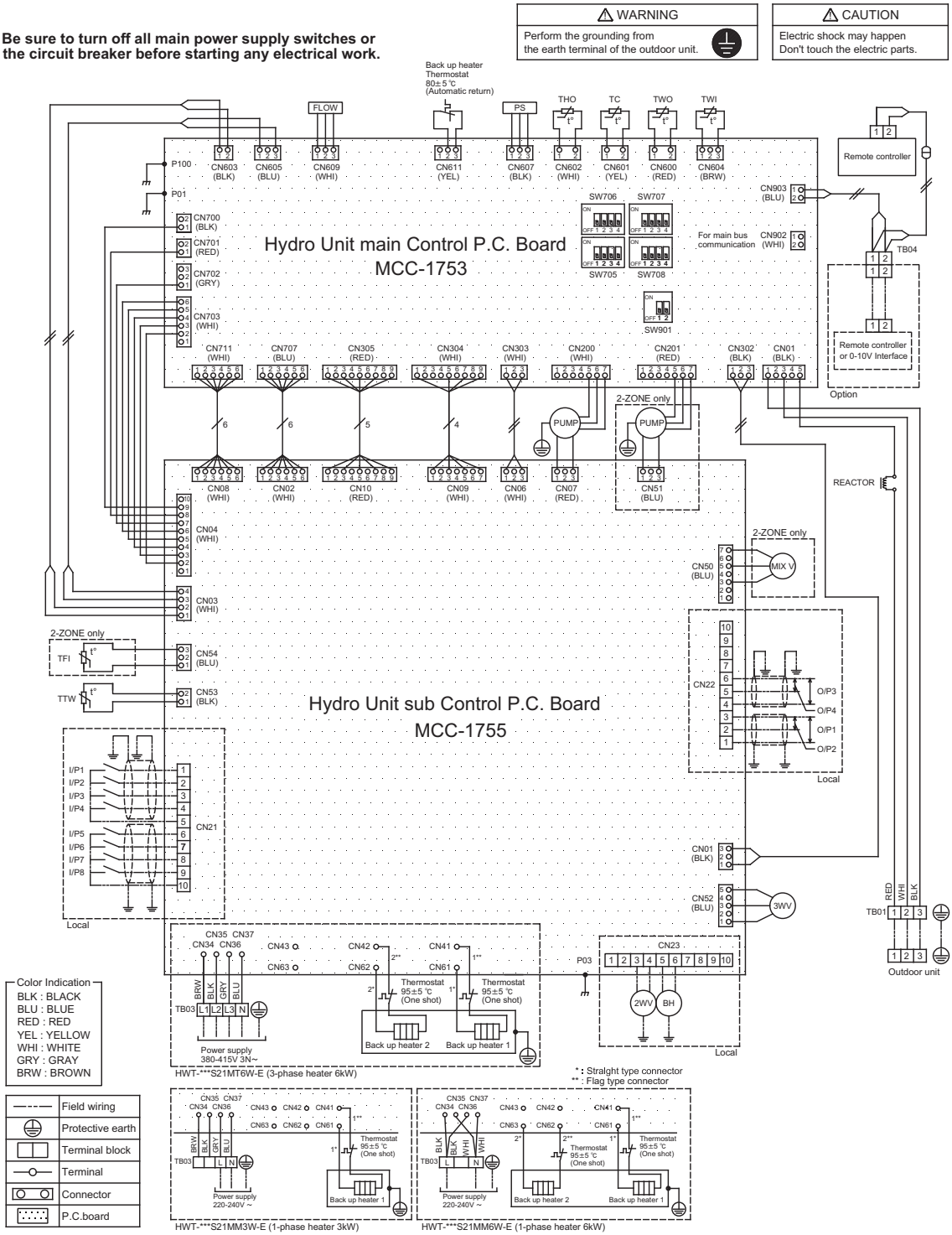

Symbol	Part name	Symbol	Part name
2WV	2-Way valve (Local)	TB	Terminal block
3WV	3-Way valve	TC	Water heat exchanger temperature sensor
BH	Booster heater (Local)	TFI	Floor heating inlet temperature sensor
CN	Connector	THO	Back up heater outlet temperature sensor
FLOW	Water flow sensor	TTW	Hot water cylinder temperature sensor
MIX V	Mixing valve	TWI	Water heat exchanger inlet temperature sensor
PS	Refrigerant pressure sensor	TWO	Water heat exchanger outlet temperature sensor
PUMP	Water pump		

Hydro unit - All In One Type

HWT-1402S21SM3W-E, HWT-1402S21SM6W-E, HWT-1402S21ST6W-E HWT-1402S21ST9W-E, HWT-1402S21MM3W-E, HWT-1402S21MM6W-E HWT-1402S21MT6W-E, HWT-1402S21MT9W-E

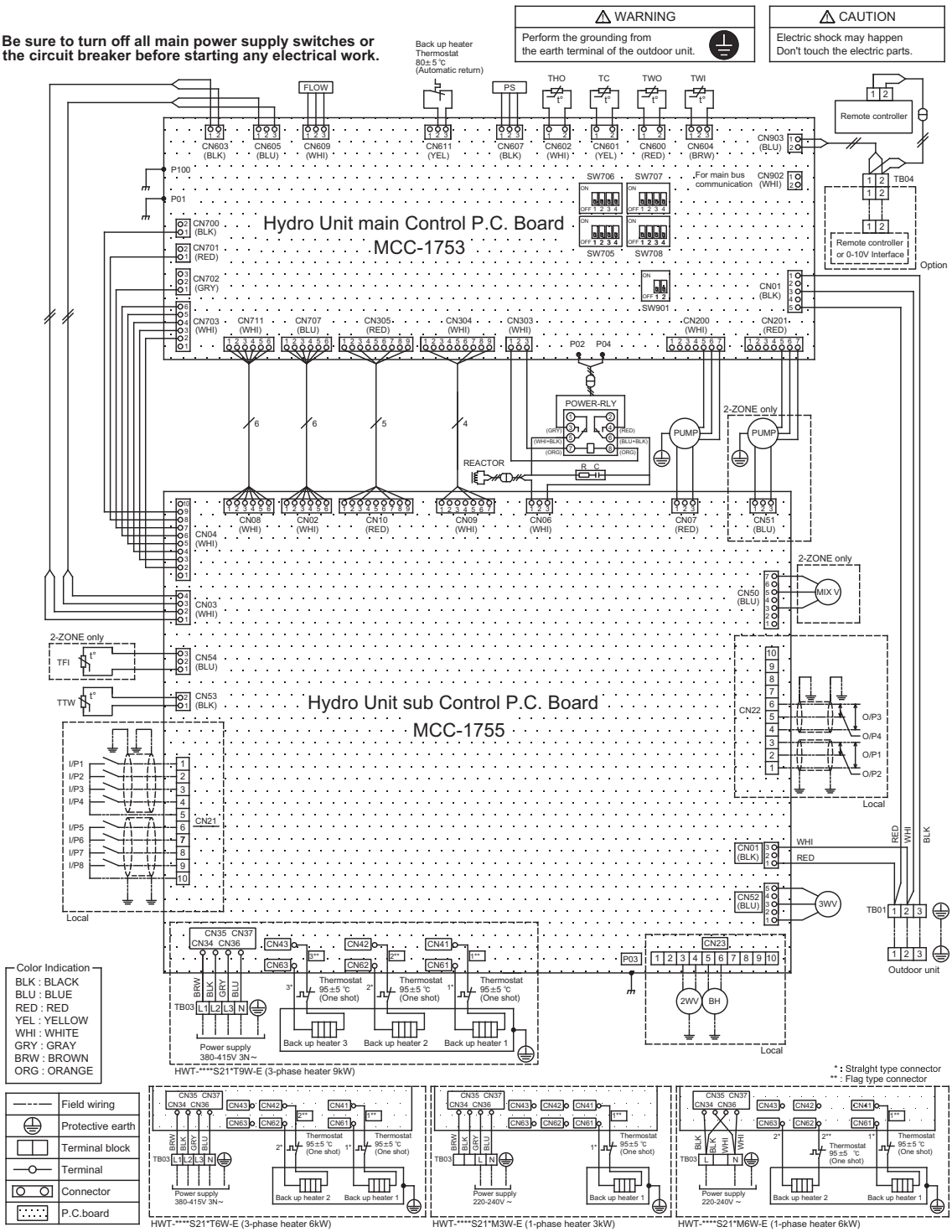

Symbol	Part name	Symbol	Part name
2WV	2-Way valve (Local)	TB	Terminal block
3WV	3-Way valve	TC	Water heat exchanger temperature sensor
BH	Booster heater (Local)	TFI	Floor heating inlet temperature sensor
CN	Connector	THO	Back up heater outlet temperature sensor
FLOW	Water flow sensor	TTW	Hot water cylinder temperature sensor
MIX V	Mixing valve	TWI	Water heat exchanger inlet temperature sensor
PS	Refrigerant pressure sensor	TWO	Water heat exchanger outlet temperature sensor
PUMP	Water pump		

2-4-2. Power line

Hydro unit - Wall Mounted Type

Electrical connection to Hydro Unit

- Remove the front cover and the electrical box cover from the Hydro Unit.
- The Hydro Unit power cable must be sized in accordance with refer to “Electrical supply/cable specifications”.
- Connect the Hydro Unit power cable to Terminal 03 as shown below.

Backup heater
220-240 V ~ type
(3, 6 kW type)

Backup heater
380-415 V 3N~
type
(6, 9 kW type)

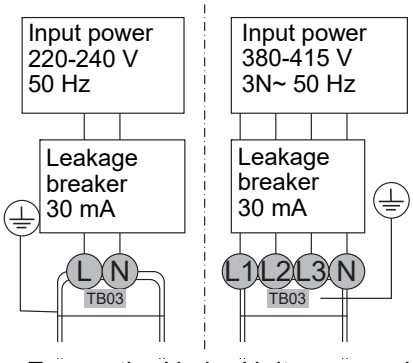

- Ensure the Hydro Unit power cable is secured using the cable clamp fitted in the electrical box.
- Ensure the Hydro Unit power cable connection terminals are tight.

Outdoor Unit to Hydro Unit electrical connection

- Outdoor unit input power 220-230 V ~, 50 Hz

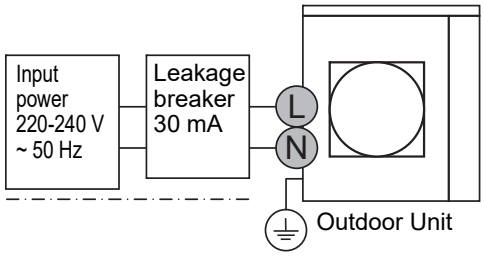

- Outdoor unit input power 380-400 V 3N ~, 50 Hz

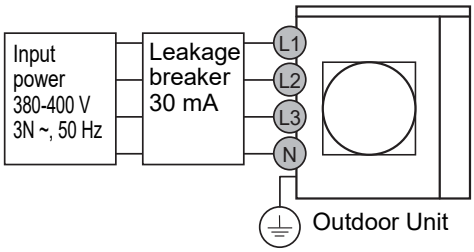

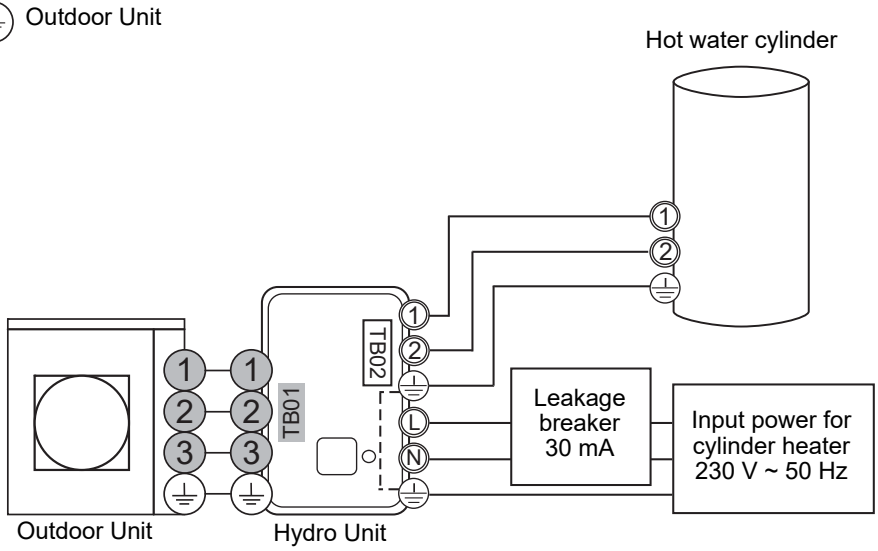

- Ensure electrical circuits are isolated before commencing work.
- The Outdoor Unit to Hydro Unit interconnecting cable must be sized in accordance with refer to “Electrical supply/ cable specifications”.
- Connect the Outdoor Unit to Hydro Unit interconnecting cable as shown in the diagram above.
- Ensure the Outdoor Unit to Hydro Unit interconnecting cable is secured using the cable clamp fitted in the electrical box.
- Ensure the Outdoor Unit to Hydro Unit interconnecting cable connection terminals are tight.

Hydro unit - All In One Type

Electrical connection to Hydro Unit for backup heater

- Remove the front cover and the electrical box cover from the Hydro Unit.
- The Hydro Unit power cable must be sized in accordance with refer to “Electrical supply/cable specifications”.
- Connect the Hydro Unit power cable to Terminal 03 as shown below.

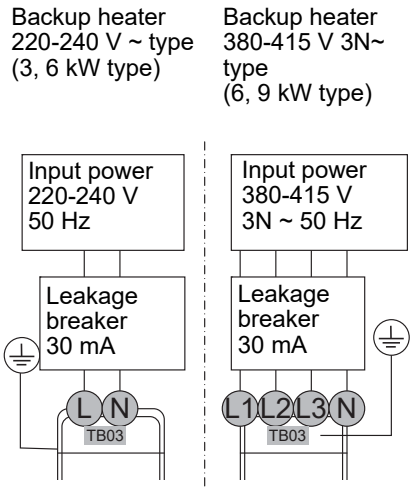

- Ensure the Hydro Unit power cable is secured using the cable clamp fitted in the electrical box.
- Ensure the Hydro Unit power cable connection terminals are tight.

3 kW, 6 kW type

TB03			
1	2	3	4
		L	N

6 kW, 9 kW type

TB03			
1	2	3	4
L1	L2	L3	N

Outdoor Unit to Hydro Unit electrical connection

- Outdoor unit input power 220-230 V ~, 50 Hz

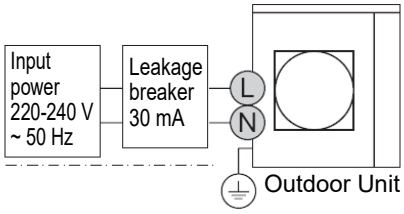

- Outdoor unit input power 380-400 V 3N ~, 50 Hz

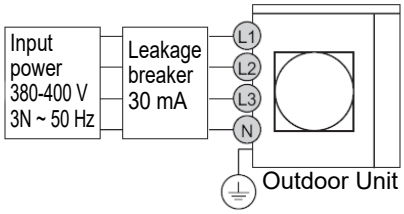

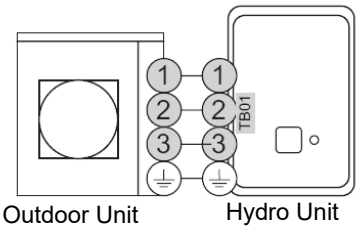

- Ensure electrical circuits are isolated before commencing work.
- The Outdoor Unit to Hydro Unit interconnecting cable must be sized in accordance with refer to “Electrical supply/cable specifications”.
- Connect the Outdoor Unit to Hydro Unit interconnecting cable as shown in the diagram above.
- Ensure the Outdoor Unit to Hydro Unit interconnecting cable is secured using the cable clamp fitted in the electrical box.
- Ensure the Outdoor Unit to Hydro Unit interconnecting cable connection terminals are tight.

2-4-3. Control line

Hydro unit - Wall Mounted Type

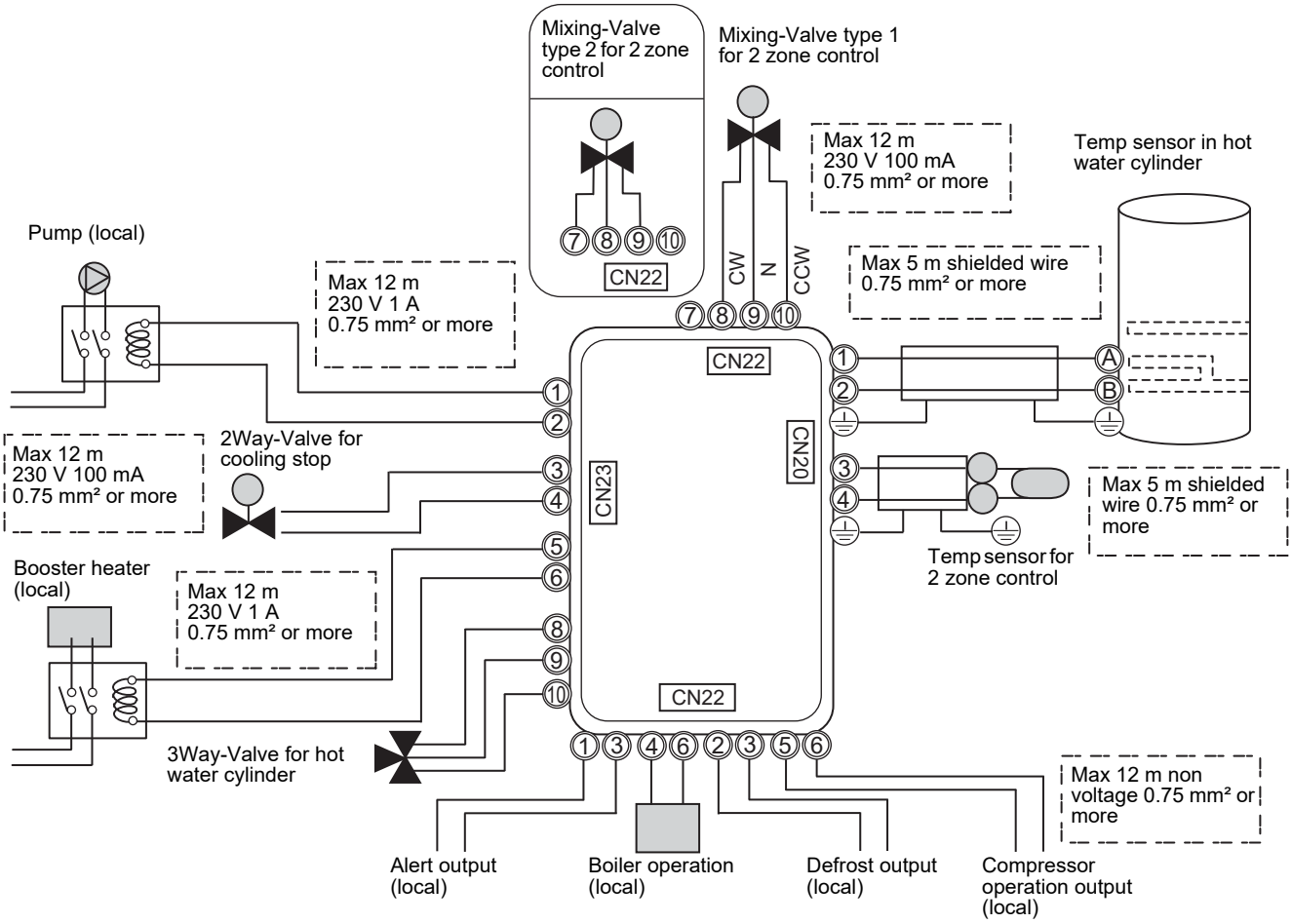

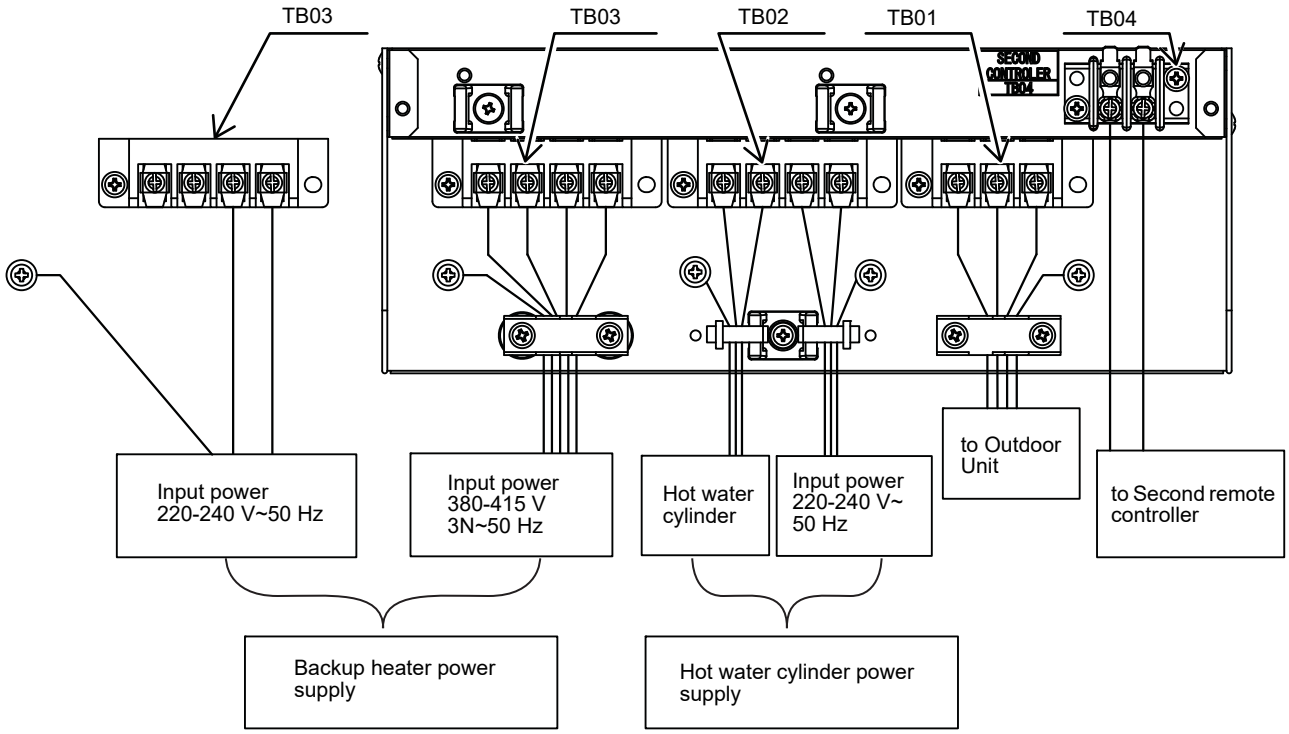

Hydro unit - All In One Type

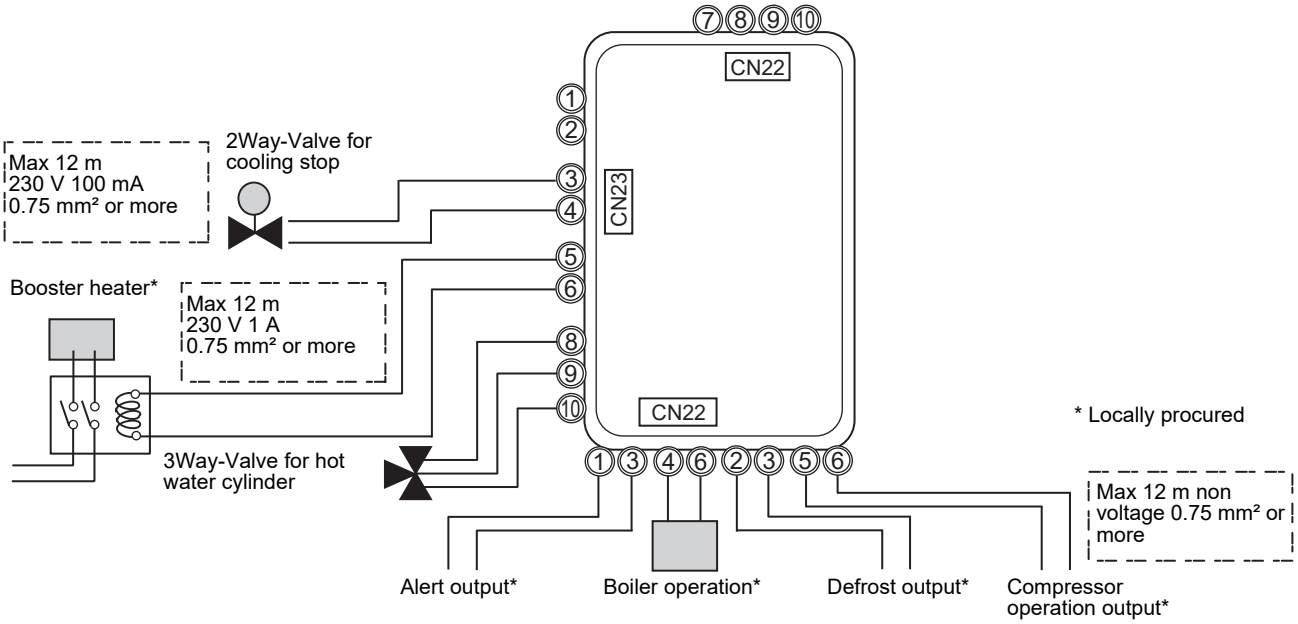

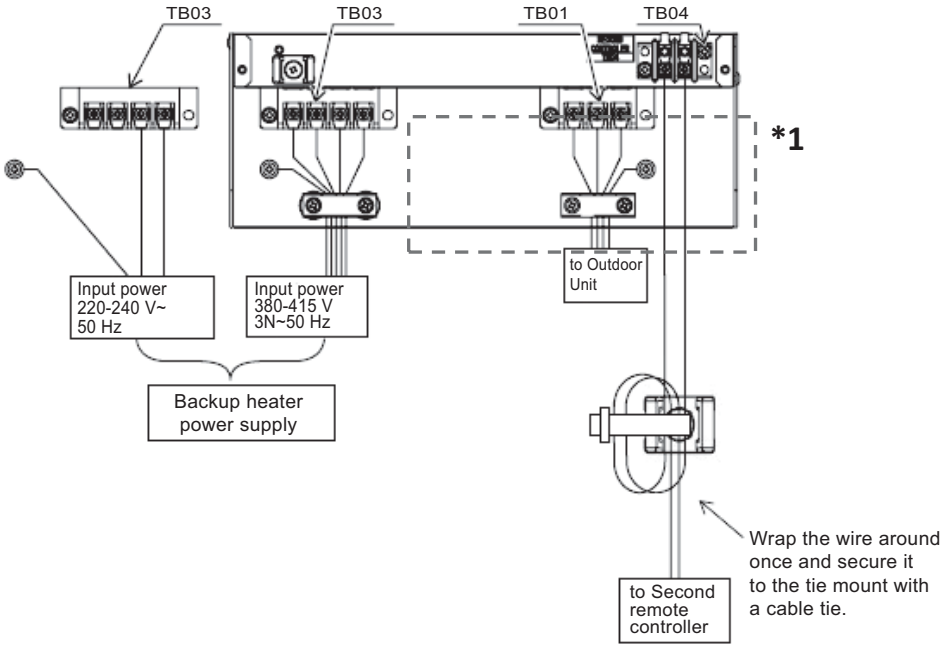

1Φ6kW Back up heater type only

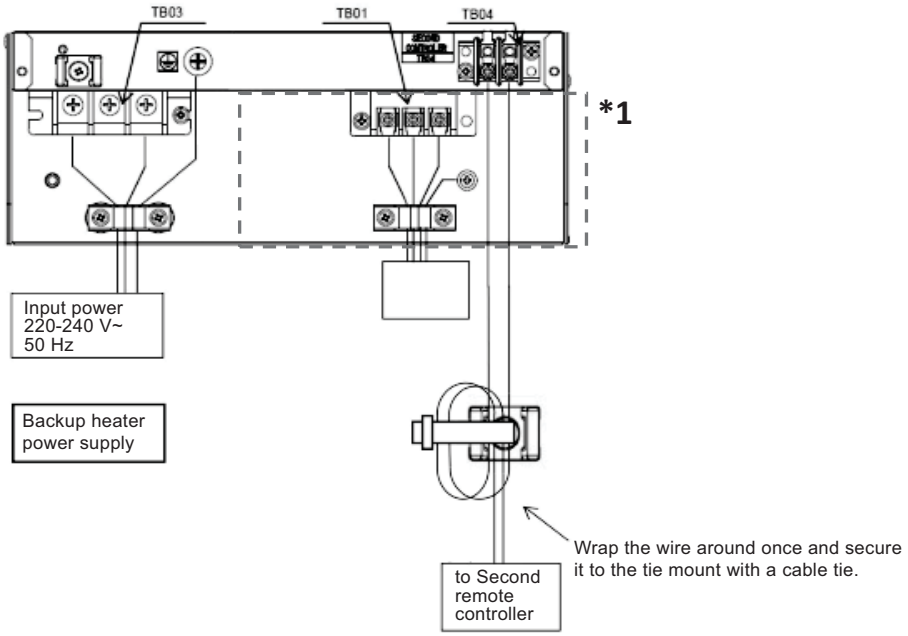

***1 The 14kW type TB01 is shown below.**

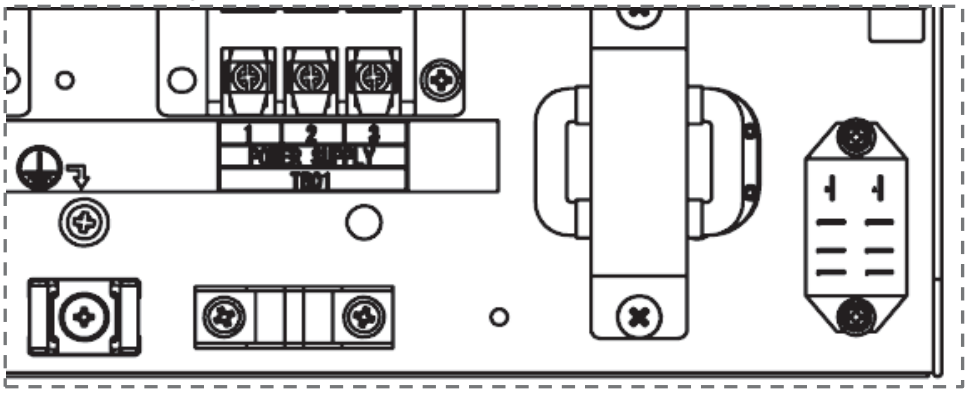

2-4-4. External Device

Hydro unit - Wall Mounted Type

Electrical connection for external booster heater

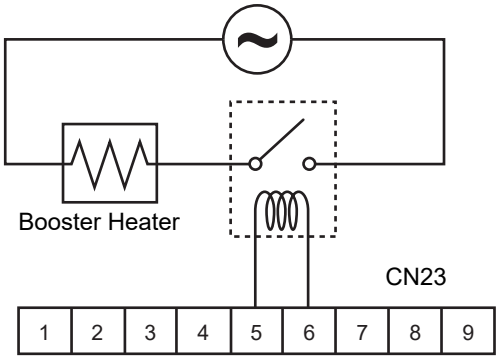

Electrical connection for external additional pumps

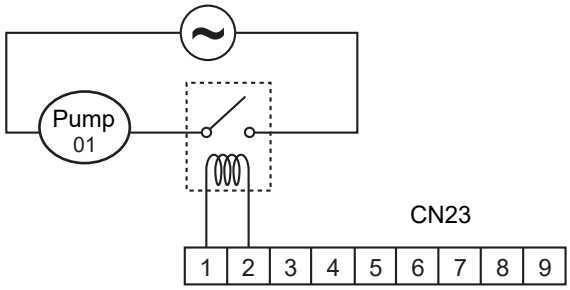

Hydro unit - All In One Type

Electrical connection for external booster heater

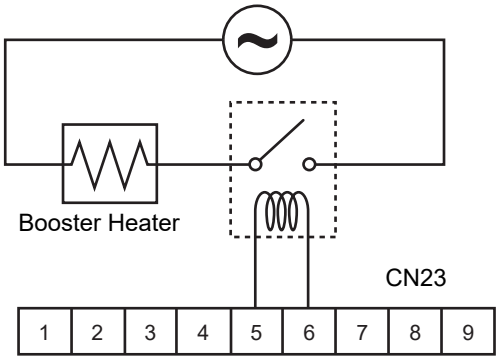

Hydro unit - Wall Mounted Type

3-way valve (diverter) connection

Required Valve Specification:

Electrical Specification: 230 V; 50 Hz; <100 mA
Valve Diameters: Port A, Port B: Ø 1 1/4"
Return Mechanism: 3 types of 3-way valve (diverter) can be used.
Set the 3-way valve in use with the DN 6B4.

		6B4
Type 1	2-wire spring return	0
Type 2	3-wire SPST	0
Type 3	3-wire SPDT	1

NOTE

Continuous operation of the valve motor at the fully open position is not recommended.

- The 3-way diverter valve is used to select either domestic hot water or space heating.
- Connect the 3-way diverter valve to terminals 8, 9 and 10 on CN23.
- Connect the 3-way diverter valve in accordance with the diagram below:

Type 1: SPRING RETURN

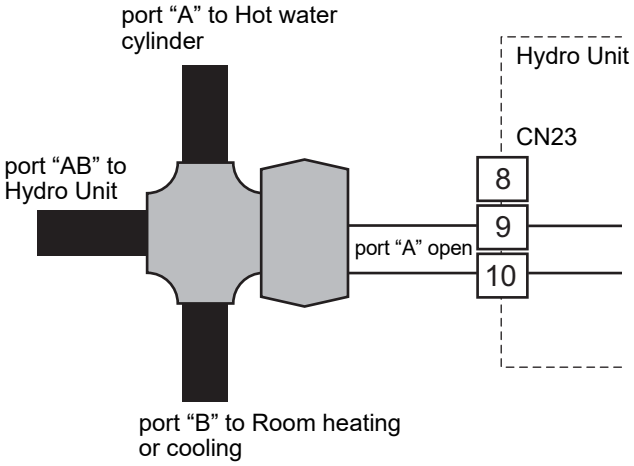

Type 2: SPST

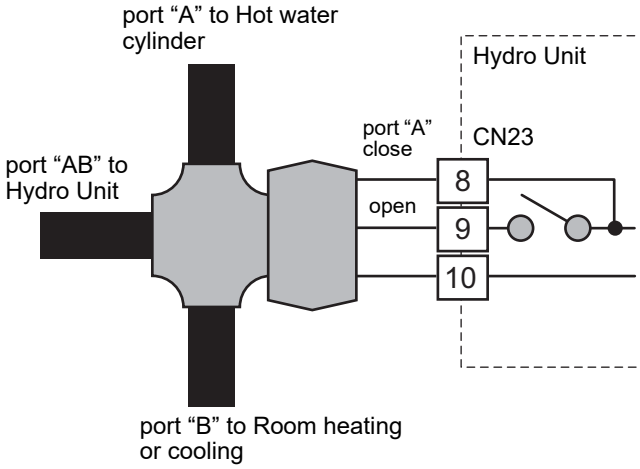

Type 3: SPDT

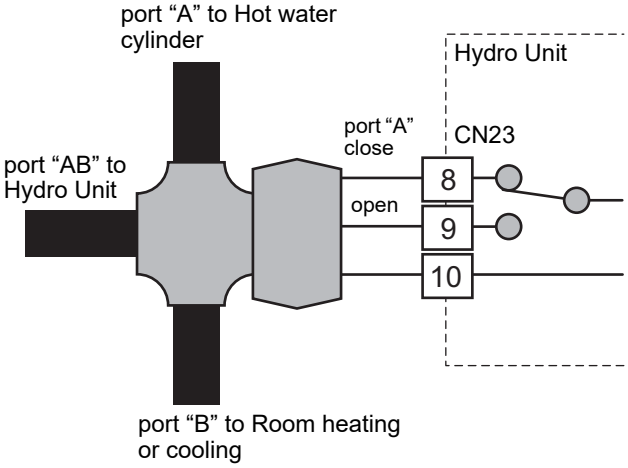

Hydro unit - Wall Mounted Type

3-way mixing valve connection

Required Actuator Specification

Electrical Specification:230 V; 50 Hz; <100 mA
The 3-way mixing valve is used to achieve the temperature differential needed in a 2-zone heating system.

- Connect the 3-way mixing valve to terminals 8, 9 and 10 on CN22 (for Type 1 mixing valve) or on terminals 7, 8 and 9 on CN22 (for Type 2 mixing valve).
- Connect the 3-way mixing valve in accordance with the diagrams below:

Type 1: SPDT

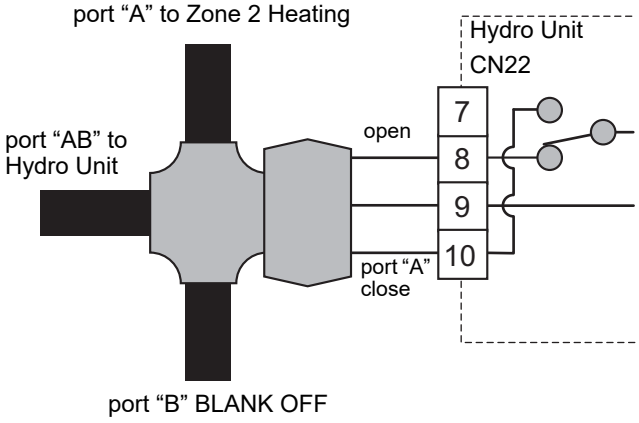

Type 2: SPST

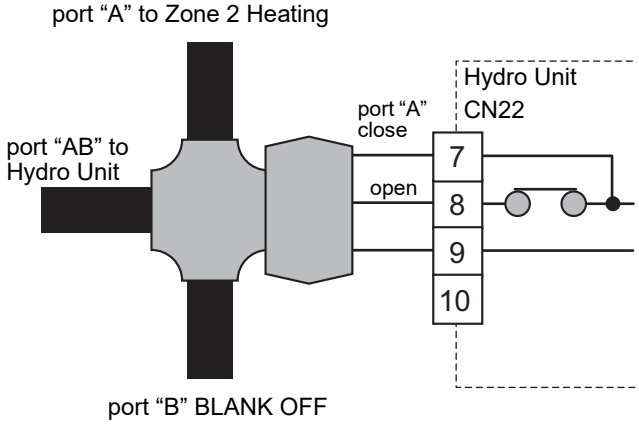

Hot water cylinder connection (optional)

- **Please refer to “Electrical supply/cable specifications” for fuse/cable size and for connection details.**

Electrical Connection (Hot Water Cylinder Electric Heater)

- The electric heater, incorporated in the hot water cylinder, requires a separate supply to Hydro Unit.
- Connect the hot water cylinder heater electrical supply in accordance with shown below:
  Live conductor: Terminal L on Terminal Block 02
  Neutral conductor: Terminal N on Terminal Block 02
  Earth Conductor: Earth terminal on Terminal Block 02
- Connect the hot water cylinder heater to the Hydro Unit as shown below:
  Live conductor to hot water cylinder: Terminal 1 on Terminal Block 03
  Neutral conductor to hot water cylinder: Terminal 2 on Terminal Block 03
  Earth conductor to hot water cylinder: Earth terminal on Terminal Block 03

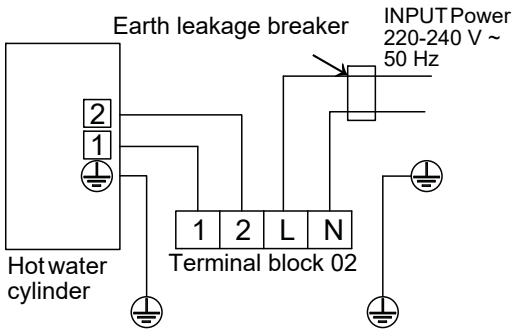

Electrical Connection (Hot Water Cylinder temperature Sensor)

- Connect the hot water cylinder temperature sensor as shown below to terminals 1 & 2 on CN20 in the Hydro Unit.
- Please ensure that the interconnecting cable, between the Hydro Unit and the hot water cylinder, is connected to earth at both ends of the cable using the shield wire.

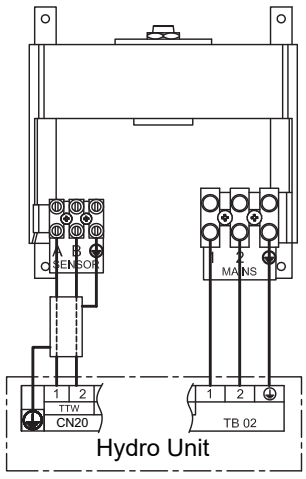

2-5. Capacity Tables

Outdoor unit: HWT-401HW-E

Average heating capacity and power input

Capacity (kW)		LWT (°C)					
		30	35	40	45	50	55
TO (°C)	-20	2.97	2.88	2.79	—	—	—
	-15	3.57	3.43	3.29	3.15	—	—
	-10	4.04	3.94	3.85	3.76	3.66	—
	-7	4.32	4.25	4.19	4.12	4.02	3.91
	-2	4.49	4.54	4.60	4.65	4.52	4.38
	2	4.63	4.78	4.93	5.08	4.92	4.76
	7	6.12	7.25	7.11	6.97	6.74	6.51
	10	8.11	7.95	7.80	7.64	7.41	7.18
	12	8.53	8.42	8.26	8.09	7.86	7.62
	15	8.76	8.63	8.47	8.31	8.05	7.79
	20	9.13	8.98	8.83	8.67	8.37	8.06

Power input (kW)		LWT (°C)					
		30	35	40	45	50	55
TO (°C)	-20	1.18	1.28	1.38	—	—	—
	-15	1.26	1.35	1.44	1.53	—	—
	-10	1.29	1.38	1.49	1.62	1.80	—
	-7	1.25	1.39	1.53	1.67	1.80	1.93
	-2	1.19	1.35	1.51	1.66	1.82	1.97
	2	1.14	1.31	1.49	1.66	1.84	2.01
	7	1.22	1.49	1.66	1.82	1.99	2.15
	10	1.31	1.48	1.66	1.83	2.00	2.17
	12	1.31	1.48	1.66	1.84	2.02	2.19
	15	1.31	1.48	1.66	1.84	2.02	2.19
	20	1.31	1.48	1.67	1.85	2.02	2.18

COP		LWT (°C)					
		30	35	40	45	50	55
TO (°C)	-20	2.52	2.25	2.02	—	—	—
	-15	2.83	2.54	2.28	2.06	—	—
	-10	3.14	2.86	2.59	2.31	2.04	—
	-7	3.45	3.06	2.74	2.47	2.23	2.03
	-2	3.79	3.38	3.06	2.80	2.48	2.22
	2	4.08	3.65	3.32	3.06	2.68	2.37
	7	5.02	4.87	4.30	3.83	3.40	3.03
	10	6.19	5.36	4.70	4.17	3.70	3.30
	12	6.51	5.69	4.97	4.40	3.90	3.48
	15	6.68	5.83	5.10	4.51	3.99	3.56
	20	6.97	6.07	5.30	4.69	4.15	3.70

* Heating capacity and power input are include defrost cycle data.
* Heating capacity and power input are shown at maximum compressor operating frequency.
* Power input does not include water pump power.
* Heating capacity and power input are measured in accordance with EN14511.

TO : Outdoor temperature (DB°C)
LWT : Leaving water temperature (°C)

Outdoor unit: HWT-401HW-E

Heating peak capacity and power input

Capacity (kW)		LWT (°C)					
		30	35	40	45	50	55
TO (°C)	-20	3.22	3.10	2.98	—	—	—
	-15	3.91	3.73	3.55	3.37	—	—
	-10	4.57	4.40	4.23	4.06	3.90	—
	-7	4.96	4.80	4.64	4.48	4.40	4.31
	-2	5.89	5.70	5.51	5.32	5.15	4.98
	2	6.64	6.42	6.21	5.99	5.76	5.52
	7	7.39	7.25	7.11	6.97	6.74	6.51
	10	8.11	7.95	7.80	7.64	7.41	7.18
	12	8.53	8.42	8.26	8.09	7.86	7.62
	15	8.76	8.63	8.47	8.31	8.05	7.79
	20	9.13	8.98	8.83	8.67	8.37	8.06

Power input (kW)		LWT (°C)					
		30	35	40	45	50	55
TO (°C)	-20	1.22	1.32	1.42	—	—	—
	-15	1.32	1.41	1.51	1.60	—	—
	-10	1.38	1.46	1.56	1.69	1.85	—
	-7	1.37	1.49	1.61	1.73	1.88	2.03
	-2	1.37	1.51	1.65	1.79	1.95	2.11
	2	1.37	1.52	1.68	1.83	2.00	2.17
	7	1.33	1.49	1.66	1.82	1.99	2.15
	10	1.31	1.48	1.66	1.83	2.00	2.17
	12	1.31	1.48	1.66	1.84	2.02	2.19
	15	1.31	1.48	1.66	1.84	2.02	2.19
	20	1.31	1.48	1.67	1.85	2.02	2.18

COP		LWT (°C)					
		30	35	40	45	50	55
TO (°C)	-20	2.64	2.35	2.10	—	—	—
	-15	2.97	2.65	2.36	2.11	—	—
	-10	3.30	3.01	2.71	2.41	2.11	—
	-7	3.62	3.22	2.88	2.59	2.34	2.12
	-2	4.31	3.78	3.35	2.98	2.65	2.36
	2	4.86	4.22	3.70	3.27	2.88	2.54
	7	5.58	4.87	4.30	3.83	3.40	3.03
	10	6.19	5.36	4.70	4.17	3.70	3.30
	12	6.51	5.69	4.97	4.40	3.90	3.48
	15	6.68	5.83	5.10	4.51	3.99	3.56
	20	6.97	6.07	5.30	4.69	4.15	3.70

* Heating capacity and power input are maximum (peak) value during operation.
* Heating capacity and power input are shown at maximum compressor operating frequency.
* Power input does not include water pump power.
* Heating capacity and power input are measured in accordance with EN14511.

TO : Outdoor temperature (DB°C)
LWT : Leaving water temperature (°C)

Outdoor unit: HWT-401HW-E

Cooling capacity and power input

Capacity (kW)		LWT (°C)				
		7	10	13	15	18
TO (°C)	20	5.47	5.86	6.24	6.62	7.19
	27	5.13	5.56	5.98	6.31	6.79
	30	4.98	5.43	5.87	6.17	6.62
	35	4.74	5.22	5.69	5.95	6.34
	40	4.00	4.58	5.16	5.44	5.87
	43	3.56	4.20	4.84	5.14	5.59

Power input (kW)		LWT (°C)				
		7	10	13	15	18
TO (°C)	20	1.03	1.11	1.18	1.16	1.13
	27	1.20	1.25	1.30	1.29	1.28
	30	1.27	1.31	1.35	1.35	1.34
	35	1.39	1.41	1.43	1.44	1.45
	40	1.51	1.54	1.57	1.58	1.59
	43	1.58	1.62	1.65	1.66	1.68

COP		LWT (°C)				
		7	10	13	15	18
TO (°C)	20	5.31	5.30	5.29	5.71	6.36
	27	4.28	4.45	4.61	4.89	5.31
	30	3.92	4.15	4.36	4.59	4.93
	35	3.41	3.70	3.98	4.14	4.37
	40	2.65	2.98	3.29	3.45	3.68
	43	2.25	2.60	2.93	3.09	3.33

* Cooling capacity and power input are shown at maximum compressor operating frequency.
* Power input does not include water pump power.
* Cooling capacity and power input are measured in accordance with EN14511.

TO : Outdoor temperature (DB°C)
LWT : Leaving water temperature (°C)

Outdoor unit: HWT-601HW-E

Average heating capacity and power input

Capacity (kW)		LWT (°C)					
		30	35	40	45	50	55
TO (°C)	-20	3.66	3.63	3.60	—	—	—
	-15	4.78	4.39	4.01	3.62	—	—
	-10	5.15	4.93	4.72	4.50	4.29	—
	-7	5.38	5.26	5.15	5.03	4.92	4.80
	-2	4.49	4.54	4.60	4.65	4.89	5.12
	2	4.63	4.78	4.93	5.08	5.23	5.37
	7	6.12	7.25	7.11	6.97	7.25	7.53
	10	8.11	7.95	7.80	7.64	7.82	8.00
	12	8.53	8.42	8.26	8.09	8.20	8.31
	15	8.76	8.63	8.47	8.31	8.26	8.22
	20	9.13	8.98	8.83	8.67	8.37	8.06

Power input (kW)		LWT (°C)					
		30	35	40	45	50	55
TO (°C)	-20	1.49	1.65	1.81	—	—	—
	-15	1.69	1.71	1.73	1.75	—	—
	-10	1.68	1.75	1.83	1.94	2.06	—
	-7	1.64	1.77	1.90	2.03	2.25	2.47
	-2	1.19	1.35	1.51	1.66	2.04	2.42
	2	1.14	1.31	1.49	1.66	2.02	2.38
	7	1.22	1.49	1.66	1.82	2.22	2.61
	10	1.31	1.48	1.66	1.83	2.22	2.60
	12	1.31	1.48	1.66	1.84	2.22	2.59
	15	1.31	1.48	1.66	1.84	2.14	2.44
	20	1.31	1.48	1.67	1.85	2.02	2.18

COP		LWT (°C)					
		30	35	40	45	50	55
TO (°C)	-20	2.46	2.20	1.99	—	—	—
	-15	2.83	2.57	2.32	2.07	—	—
	-10	3.07	2.82	2.57	2.32	2.08	—
	-7	3.28	2.97	2.71	2.48	2.18	1.94
	-2	3.79	3.38	3.06	2.80	2.39	2.11
	2	4.08	3.65	3.32	3.06	2.59	2.26
	7	5.02	4.87	4.30	3.83	3.27	2.89
	10	6.19	5.36	4.70	4.17	3.53	3.08
	12	6.51	5.69	4.97	4.40	3.70	3.21
	15	6.68	5.83	5.10	4.51	3.86	3.37
	20	6.97	6.07	5.30	4.69	4.15	3.70

* Heating capacity and power input are include defrost cycle data.
* Heating capacity and power input are shown at maximum compressor operating frequency.
* Power input does not include water pump power.
* Heating capacity and power input are measured in accordance with EN14511.

TO : Outdoor temperature (DB°C)
LWT : Leaving water temperature (°C)

Outdoor unit: HWT-601HW-E

Heating peak capacity and power input

Capacity (kW)		LWT (°C)					
		30	35	40	45	50	55
TO (°C)	-20	4.13	4.03	3.93	—	—	—
	-15	5.11	4.75	4.39	4.03	—	—
	-10	5.79	5.57	5.35	5.14	4.92	—
	-7	6.19	6.06	5.93	5.80	5.61	5.42
	-2	5.89	5.70	5.51	5.32	5.56	5.80
	2	6.64	6.42	6.21	5.99	6.05	6.10
	7	7.39	7.25	7.11	6.97	7.25	7.53
	10	8.11	7.95	7.80	7.64	7.82	8.00
	12	8.53	8.42	8.26	8.09	8.20	8.31
	15	8.76	8.63	8.47	8.31	8.26	8.22
	20	9.13	8.98	8.83	8.67	8.37	8.06

Power input (kW)		LWT (°C)					
		30	35	40	45	50	55
TO (°C)	-20	1.58	1.73	1.88	—	—	—
	-15	1.77	1.79	1.82	1.84	—	—
	-10	1.81	1.89	1.99	2.11	2.26	—
	-7	1.79	1.95	2.10	2.25	2.46	2.66
	-2	1.37	1.51	1.65	1.79	2.18	2.58
	2	1.37	1.52	1.68	1.83	2.18	2.52
	7	1.33	1.49	1.66	1.82	2.22	2.61
	10	1.31	1.48	1.66	1.83	2.22	2.60
	12	1.31	1.48	1.66	1.84	2.22	2.59
	15	1.31	1.48	1.66	1.84	2.14	2.44
	20	1.31	1.48	1.67	1.85	2.02	2.18

COP		LWT (°C)					
		30	35	40	45	50	55
TO (°C)	-20	2.61	2.33	2.09	—	—	—
	-15	2.90	2.65	2.42	2.19	—	—
	-10	3.20	2.94	2.69	2.43	2.18	—
	-7	3.45	3.12	2.83	2.58	2.29	2.04
	-2	4.31	3.78	3.35	2.98	2.55	2.25
	2	4.86	4.22	3.70	3.27	2.78	2.42
	7	5.58	4.87	4.30	3.83	3.27	2.89
	10	6.19	5.36	4.70	4.17	3.53	3.08
	12	6.51	5.69	4.97	4.40	3.70	3.21
	15	6.68	5.83	5.10	4.51	3.86	3.37
	20	6.97	6.07	5.30	4.69	4.15	3.70

* Heating capacity and power input are maximum (peak) value during operation.
* Heating capacity and power input are shown at maximum compressor operating frequency.
* Power input does not include water pump power.
* Heating capacity and power input are measured in accordance with EN14511.

TO : Outdoor temperature (DB°C)
LWT : Leaving water temperature (°C)

Outdoor unit: HWT-601HW-E

Cooling capacity and power input

Capacity (kW)		LWT (°C)				
		7	10	13	15	18
TO (°C)	20	5.72	6.18	6.63	6.98	7.51
	27	5.54	6.06	6.57	6.88	7.33
	30	5.46	6.01	6.55	6.83	7.25
	35	5.33	5.92	6.51	6.75	7.12
	40	4.81	5.42	6.04	6.26	6.60
	43	4.49	5.12	5.75	5.97	6.29

Power input (kW)		LWT (°C)				
		7	10	13	15	18
TO (°C)	20	1.12	1.17	1.21	1.22	1.23
	27	1.40	1.44	1.48	1.49	1.51
	30	1.52	1.56	1.59	1.60	1.62
	35	1.72	1.75	1.78	1.80	1.82
	40	1.86	1.90	1.94	1.95	1.97
	43	1.94	1.99	2.03	2.04	2.06

COP		LWT (°C)				
		7	10	13	15	18
TO (°C)	20	5.11	5.30	5.48	5.73	6.11
	27	3.96	4.21	4.45	4.62	4.87
	30	3.59	3.86	4.12	4.26	4.47
	35	3.10	3.38	3.66	3.76	3.91
	40	2.59	2.86	3.12	3.21	3.35
	43	2.31	2.58	2.83	2.92	3.05

* Cooling capacity and power input are shown at maximum compressor operating frequency.
* Power input does not include water pump power.
* Cooling capacity and power input are measured in accordance with EN14511.

TO : Outdoor temperature (DB°C)
LWT : Leaving water temperature (°C)

Outdoor unit: HWT-801H(R)W-E

Average heating capacity and power input

Capacity (kW)		LWT (°C)							
		30	35	40	45	50	55	60	65
TO (°C)	-25	4.04	4.06	4.08	4.10	4.17	4.23	4.11	—
	-20	5.00	5.01	5.03	4.70	5.08	5.11	4.93	—
	-15	5.95	5.96	5.98	6.00	6.00	5.99	5.75	—
	-10	6.80	6.74	6.77	6.80	6.66	6.52	6.24	—
	-7	7.31	7.21	7.25	7.28	7.06	6.83	6.54	—
	-2	8.13	8.08	8.08	8.08	7.99	7.90	7.07	—
	2	8.57	8.49	8.53	8.57	8.38	8.19	7.49	—
	7	12.39	11.90	11.83	11.75	10.86	9.96	9.07	5.08
	10	13.02	12.57	12.46	12.36	11.56	10.76	9.96	5.09
	12	13.44	13.01	12.89	12.77	12.03	11.29	10.55	5.09
	15	13.69	13.22	13.04	12.87	12.11	11.36	10.60	5.08
	20	14.10	13.57	13.30	13.03	12.25	11.47	10.69	5.06

Power input (kW)		LWT (°C)							
		30	35	40	45	50	55	60	65
TO (°C)	-25	1.87	2.09	2.31	2.53	2.82	3.11	3.06	—
	-20	2.07	2.29	2.53	2.64	2.98	3.20	3.28	—
	-15	2.28	2.48	2.74	3.00	3.15	3.29	3.49	—
	-10	2.40	2.60	2.86	3.11	3.25	3.39	3.54	—
	-7	2.47	2.67	2.93	3.18	3.32	3.45	3.57	—
	-2	2.29	2.52	2.78	3.03	3.23	3.43	3.63	—
	2	2.19	2.41	2.72	3.02	3.15	3.28	3.31	—
	7	2.41	2.62	3.01	3.39	3.43	3.47	3.51	2.19
	10	2.42	2.63	3.00	3.38	3.42	3.47	3.52	2.06
	12	2.42	2.63	3.00	3.37	3.42	3.47	3.52	1.98
	15	2.42	2.63	3.01	3.39	3.42	3.46	3.49	1.90
	20	2.42	2.62	3.02	3.42	3.43	3.44	3.45	1.76

COP		LWT (°C)							
		30	35	40	45	50	55	60	65
TO (°C)	-25	2.16	1.94	1.77	1.62	1.48	1.36	1.34	—
	-20	2.41	2.19	1.99	1.78	1.70	1.60	1.51	—
	-15	2.61	2.40	2.18	2.00	1.91	1.82	1.65	—
	-10	2.83	2.59	2.37	2.18	2.05	1.92	1.76	—
	-7	2.95	2.70	2.48	2.29	2.13	1.98	1.83	—
	-2	3.54	3.21	2.91	2.67	2.47	2.30	1.95	—
	2	3.91	3.52	3.14	2.84	2.66	2.50	2.26	—
	7	5.14	4.54	3.94	3.47	3.16	2.87	2.58	2.32
	10	5.39	4.79	4.15	3.66	3.38	3.10	2.83	2.46
	12	5.55	4.95	4.30	3.79	3.52	3.25	3.00	2.57
	15	5.66	5.03	4.34	3.80	3.54	3.28	3.03	2.68
	20	5.84	5.18	4.40	3.81	3.57	3.33	3.10	2.88

* Heating capacity and power input are include defrost cycle data.
* Heating capacity and power input are shown at maximum compressor operating frequency.
* Power input does not include water pump power.
* Heating capacity and power input are measured in accordance with EN14511.

TO : Outdoor temperature (DB°C)
LWT : Leaving water temperature (°C)

Outdoor unit: HWT-801H(R)W-E

Heating peak capacity and power input

Capacity (kW)		LWT (°C)							
		30	35	40	45	50	55	60	65
TO (°C)	-25	4.37	4.43	4.49	4.55	4.61	4.67	4.51	—
	-20	5.40	5.45	5.50	5.27	5.54	5.54	5.31	—
	-15	6.42	6.46	6.50	6.54	6.48	6.41	6.10	—
	-10	7.60	7.49	7.47	7.45	7.23	7.00	6.67	—
	-7	8.30	8.11	8.06	8.00	7.68	7.35	7.01	—
	-2	9.35	9.24	9.20	9.15	8.97	8.79	7.78	—
	2	10.50	10.30	10.28	10.26	9.88	9.50	8.40	—
	7	12.39	11.90	11.83	11.75	10.86	9.96	9.07	5.08
	10	13.02	12.57	12.46	12.36	11.56	10.76	9.96	5.09
	12	13.44	13.01	12.89	12.77	12.03	11.29	10.55	5.09
	15	13.69	13.22	13.04	12.87	12.11	11.36	10.60	5.08
	20	14.10	13.57	13.30	13.03	12.25	11.47	10.69	5.06

Power input (kW)		LWT (°C)							
		30	35	40	45	50	55	60	65
TO (°C)	-25	1.99	2.22	2.45	2.68	2.98	3.27	3.21	—
	-20	2.14	2.41	2.68	2.83	3.15	3.36	3.41	—
	-15	2.30	2.60	2.91	3.21	3.33	3.44	3.61	—
	-10	2.55	2.78	3.04	3.31	3.43	3.54	3.67	—
	-7	2.70	2.88	3.13	3.37	3.49	3.60	3.71	—
	-2	2.48	2.71	2.99	3.26	3.46	3.65	3.61	—
	2	2.57	2.77	3.08	3.38	3.47	3.56	3.53	—
	7	2.41	2.62	3.01	3.39	3.43	3.47	3.51	2.19
	10	2.42	2.63	3.00	3.38	3.42	3.47	3.52	2.06
	12	2.42	2.63	3.00	3.37	3.42	3.47	3.52	1.98
	15	2.42	2.63	3.01	3.39	3.42	3.46	3.49	1.90
	20	2.42	2.62	3.02	3.42	3.43	3.44	3.45	1.76

COP		LWT (°C)							
		30	35	40	45	50	55	60	65
TO (°C)	-25	2.20	2.00	1.83	1.70	1.55	1.43	1.40	—
	-20	2.52	2.26	2.05	1.86	1.76	1.65	1.56	—
	-15	2.80	2.48	2.24	2.04	1.95	1.86	1.69	—
	-10	2.98	2.70	2.46	2.25	2.11	1.98	1.82	—
	-7	3.07	2.82	2.58	2.37	2.20	2.04	1.89	—
	-2	3.78	3.41	3.08	2.81	2.60	2.41	2.16	—
	2	4.08	3.72	3.34	3.04	2.85	2.67	2.38	—
	7	5.14	4.54	3.94	3.47	3.16	2.87	2.58	2.32
	10	5.39	4.79	4.15	3.66	3.38	3.10	2.83	2.46
	12	5.55	4.95	4.30	3.79	3.52	3.25	3.00	2.57
	15	5.66	5.03	4.34	3.80	3.54	3.28	3.03	2.68
	20	5.84	5.18	4.40	3.81	3.57	3.33	3.10	2.88

* Heating capacity and power input are maximum (peak) value during operation.
* Heating capacity and power input are shown at maximum compressor operating frequency.
* Power input does not include water pump power.
* Heating capacity and power input are measured in accordance with EN14511.

TO : Outdoor temperature (DB°C)
LWT : Leaving water temperature (°C)

Outdoor unit: HWT-801H(R)W-E

Cooling capacity and power input

Capacity (kW)		LWT (°C)				
		7	10	13	15	18
TO (°C)	20	7.79	8.42	8.97	9.46	10.09
	27	7.30	7.90	8.49	8.91	9.51
	30	7.08	7.68	8.28	8.67	9.26
	35	6.73	7.31	7.94	8.27	8.85
	40	5.54	6.22	7.00	7.36	8.04
	43	4.82	5.57	6.43	6.81	7.56

Power input (kW)		LWT (°C)				
		7	10	13	15	18
TO (°C)	20	1.71	1.71	1.77	1.71	1.71
	27	1.93	1.95	1.99	1.97	1.98
	30	2.03	2.05	2.09	2.08	2.10
	35	2.19	2.22	2.25	2.26	2.29
	40	2.40	2.44	2.50	2.50	2.54
	43	2.53	2.57	2.65	2.65	2.69

COP		LWT (°C)				
		7	10	13	15	18
TO (°C)	20	4.56	4.92	5.07	5.53	5.90
	27	3.77	4.06	4.26	4.53	4.80
	30	3.49	3.75	3.96	4.17	4.42
	35	3.07	3.30	3.53	3.66	3.86
	40	2.30	2.55	2.80	2.94	3.17
	43	1.91	2.16	2.43	2.57	2.81

* Cooling capacity and power input are shown at maximum compressor operating frequency.
* Power input does not include water pump power.
* Cooling capacity and power input are measured in accordance with EN14511.

TO : Outdoor temperature (DB°C)
LWT : Leaving water temperature (°C)

Outdoor unit: HWT-1101H(R)W-E

Average heating capacity and power input

Capacity (kW)		LWT (°C)							
		30	35	40	45	50	55	60	65
TO (°C)	-25	4.66	4.70	4.74	4.78	4.80	4.82	4.54	—
	-20	5.70	5.74	5.77	5.53	5.71	5.61	5.15	—
	-15	6.74	6.77	6.80	6.83	6.62	6.40	5.75	—
	-10	7.67	7.51	7.43	7.35	7.01	6.67	6.24	—
	-7	8.27	7.95	7.81	7.66	7.17	6.83	6.54	—
	-2	9.14	8.89	8.81	8.72	8.31	7.90	7.07	—
	2	9.55	9.28	9.08	8.87	8.53	8.19	7.49	—
	7	14.01	13.24	12.83	12.41	11.29	10.17	9.05	5.08
	10	14.62	13.86	13.39	12.92	11.88	10.84	9.80	5.09
	12	15.03	14.28	13.77	13.26	12.28	11.29	10.31	5.09
	15	15.30	14.51	13.87	13.23	12.30	11.36	10.42	5.08
	20	15.76	14.90	14.05	13.19	12.33	11.47	10.61	5.06

Power input (kW)		LWT (°C)							
		30	35	40	45	50	55	60	65
TO (°C)	-25	2.19	2.43	2.68	2.92	3.20	3.48	3.44	—
	-20	2.44	2.71	2.97	3.19	3.37	3.50	3.47	—
	-15	2.70	2.98	3.27	3.55	3.54	3.52	3.49	—
	-10	2.92	3.07	3.28	3.49	3.49	3.48	3.54	—
	-7	3.05	3.13	3.30	3.46	3.47	3.45	3.57	—
	-2	2.74	2.88	3.14	3.39	3.41	3.43	3.43	—
	2	2.67	2.79	3.00	3.20	3.24	3.28	3.31	—
	7	3.03	3.15	3.43	3.71	3.67	3.62	3.58	2.19
	10	3.02	3.12	3.37	3.61	3.57	3.53	3.49	2.06
	12	3.01	3.10	3.33	3.55	3.51	3.47	3.43	1.98
	15	3.00	3.09	3.31	3.53	3.50	3.46	3.42	1.90
	20	2.99	3.08	3.29	3.50	3.47	3.44	3.41	1.76

COP		LWT (°C)							
		30	35	40	45	50	55	60	65
TO (°C)	-25	2.13	1.93	1.77	1.64	1.50	1.39	1.32	—
	-20	2.34	2.12	1.94	1.73	1.69	1.60	1.48	—
	-15	2.50	2.27	2.08	1.92	1.87	1.82	1.65	—
	-10	2.63	2.44	2.26	2.10	2.01	1.92	1.76	—
	-7	2.72	2.54	2.37	2.21	2.07	1.98	1.83	—
	-2	3.33	3.09	2.81	2.57	2.44	2.30	2.06	—
	2	3.58	3.33	3.03	2.77	2.63	2.50	2.26	—
	7	4.62	4.20	3.74	3.35	3.08	2.81	2.53	2.32
	10	4.84	4.44	3.98	3.57	3.33	3.07	2.81	2.46
	12	5.00	4.61	4.14	3.74	3.50	3.25	3.00	2.57
	15	5.10	4.69	4.19	3.75	3.52	3.28	3.04	2.68
	20	5.27	4.84	4.27	3.77	3.55	3.33	3.11	2.88

* Heating capacity and power input are include defrost cycle data.
* Heating capacity and power input are shown at maximum compressor operating frequency.
* Power input does not include water pump power.
* Heating capacity and power input are measured in accordance with EN14511.

TO : Outdoor temperature (DB°C)
LWT : Leaving water temperature (°C)

Outdoor unit: HWT-1101H(R)W-E

Heating peak capacity and power input

Capacity (kW)		LWT (°C)							
		30	35	40	45	50	55	60	65
TO (°C)	-25	5.12	5.20	5.28	5.36	5.35	5.33	5.06	—
	-20	6.21	6.29	6.36	6.25	6.26	6.07	5.58	—
	-15	7.30	7.37	7.45	7.52	7.17	6.81	6.10	—
	-10	8.70	8.45	8.27	8.10	7.62	7.15	6.67	—
	-7	9.56	9.10	8.77	8.44	7.86	7.72	7.01	—
	-2	10.65	10.28	10.16	10.03	9.41	9.23	7.78	—
	2	11.95	11.46	11.06	10.66	10.08	9.98	8.40	—
	7	14.01	13.24	12.83	12.41	11.29	10.17	9.05	5.08
	10	14.62	13.86	13.39	12.92	11.88	10.84	9.80	5.09
	12	15.03	14.28	13.77	13.26	12.28	11.29	10.31	5.09
	15	15.30	14.51	13.87	13.23	12.30	11.36	10.42	5.07
	20	15.76	14.90	14.05	13.19	12.33	11.47	10.61	5.06

Power input (kW)		LWT (°C)							
		30	35	40	45	50	55	60	65
TO (°C)	-25	2.32	2.60	2.89	3.17	3.43	3.69	3.63	—
	-20	2.58	2.89	3.19	3.49	3.59	3.68	3.62	—
	-15	2.85	3.17	3.50	3.82	3.75	3.67	3.61	—
	-10	3.17	3.32	3.53	3.74	3.68	3.63	3.67	—
	-7	3.35	3.41	3.55	3.69	3.68	3.78	3.71	—
	-2	3.05	3.17	3.43	3.69	3.67	3.83	3.61	—
	2	3.16	3.24	3.42	3.59	3.58	3.74	3.53	—
	7	3.03	3.15	3.43	3.71	3.67	3.62	3.58	2.19
	10	3.02	3.12	3.37	3.61	3.57	3.53	3.49	2.06
	12	3.01	3.10	3.33	3.55	3.51	3.47	3.43	1.98
	15	3.00	3.09	3.31	3.53	3.50	3.46	3.42	1.90
	20	2.99	3.08	3.29	3.50	3.47	3.44	3.41	1.76

COP		LWT (°C)							
		30	35	40	45	50	55	60	65
TO (°C)	-25	2.21	2.00	1.83	1.69	1.56	1.44	1.39	—
	-20	2.41	2.18	1.99	1.79	1.74	1.65	1.54	—
	-15	2.56	2.32	2.13	1.97	1.91	1.86	1.69	—
	-10	2.74	2.55	2.34	2.17	2.07	1.97	1.82	—
	-7	2.86	2.67	2.47	2.29	2.14	2.04	1.89	—
	-2	3.49	3.24	2.96	2.72	2.56	2.41	2.16	—
	2	3.78	3.54	3.24	2.97	2.82	2.67	2.38	—
	7	4.62	4.20	3.74	3.35	3.08	2.81	2.53	2.32
	10	4.84	4.44	3.98	3.57	3.33	3.07	2.81	2.46
	12	5.00	4.61	4.14	3.74	3.50	3.25	3.00	2.57
	15	5.10	4.69	4.19	3.75	3.52	3.28	3.04	2.67
	20	5.27	4.84	4.27	3.77	3.55	3.33	3.11	2.88

* Heating capacity and power input are maximum (peak) value during operation.
* Heating capacity and power input are shown at maximum compressor operating frequency.
* Power input does not include water pump power.
* Heating capacity and power input are measured in accordance with EN14511.

TO : Outdoor temperature (DB°C)
LWT : Leaving water temperature (°C)

Outdoor unit: HWT-1101H(R)W-E

Cooling capacity and power input

Capacity (kW)		LWT (°C)				
		7	10	13	15	18
TO (°C)	20	8.12	8.79	9.47	9.90	10.57
	27	7.91	8.60	9.37	9.74	10.43
	30	7.83	8.52	9.32	9.67	10.36
	35	8.00	8.38	9.25	9.56	10.26
	40	5.97	6.68	7.49	7.86	8.57
	43	4.95	5.66	6.43	6.85	7.56

Power input (kW)		LWT (°C)				
		7	10	13	15	18
TO (°C)	20	1.85	1.84	1.83	1.81	1.80
	27	2.25	2.29	2.37	2.35	2.39
	30	2.42	2.48	2.60	2.58	2.64
	35	2.86	2.81	2.98	2.96	3.06
	40	2.69	2.72	2.77	2.79	2.83
	43	2.67	2.68	2.65	2.68	2.69

COP		LWT (°C)				
		7	10	13	15	18
TO (°C)	20	4.39	4.79	5.17	5.46	5.87
	27	3.52	3.76	3.96	4.14	4.37
	30	3.23	3.43	3.59	3.75	3.93
	35	2.80	2.99	3.10	3.22	3.35
	40	2.22	2.45	2.70	2.82	3.03
	43	1.85	2.12	2.43	2.55	2.81

* Cooling capacity and power input are shown at maximum compressor operating frequency.
* Power input does not include water pump power.
* Cooling capacity and power input are measured in accordance with EN14511.

TO : Outdoor temperature (DB°C)
LWT : Leaving water temperature (°C)

Outdoor unit: HWT-1401H(R)W-E

Average heating capacity and power input

Capacity (kW)		LWT (°C)							
		30	35	40	45	50	55	60	65
TO (°C)	-25	7.08	7.07	7.07	7.06	7.03	6.99	—	—
	-20	8.28	8.17	8.18	8.19	7.95	7.71	—	—
	-15	9.48	9.27	9.30	9.32	8.87	8.42	7.55	—
	-10	10.01	9.85	9.84	9.83	9.50	9.17	8.39	—
	-7	10.33	10.19	10.17	10.14	9.88	9.62	8.90	—
	-2	11.67	11.38	11.16	10.93	10.58	10.22	9.54	—
	2	10.81	10.80	10.68	10.56	10.66	10.76	10.09	—
	7	15.15	14.98	14.76	14.54	14.43	14.31	13.32	6.28
	10	18.95	18.20	17.44	16.68	15.95	15.22	14.14	6.25
	12	21.48	20.35	19.23	18.11	16.97	15.83	14.69	6.23
	15	20.80	19.71	18.57	17.44	16.37	15.31	14.25	6.73
	20	19.68	18.63	17.47	16.31	15.38	14.45	13.52	7.57

Power input (kW)		LWT (°C)							
		30	35	40	45	50	55	60	65
TO (°C)	-25	3.29	3.53	3.77	4.01	4.33	4.64	—	—
	-20	3.47	3.69	3.95	4.21	4.43	4.65	—	—
	-15	3.65	3.85	4.13	4.41	4.54	4.66	4.68	—
	-10	3.70	3.89	4.13	4.37	4.50	4.62	4.66	—
	-7	3.74	3.91	4.13	4.35	4.48	4.60	4.65	—
	-2	3.82	3.94	4.11	4.27	4.35	4.42	4.54	—
	2	3.42	3.58	3.79	3.99	4.11	4.22	4.34	—
	7	4.01	4.14	4.28	4.42	4.55	4.68	4.67	2.82
	10	4.42	4.47	4.54	4.62	4.65	4.68	4.66	2.68
	12	4.69	4.69	4.72	4.75	4.72	4.68	4.65	2.59
	15	4.51	4.50	4.52	4.54	4.50	4.46	4.41	2.59
	20	4.21	4.18	4.18	4.18	4.13	4.08	4.03	2.59

COP		LWT (°C)							
		30	35	40	45	50	55	60	65
TO (°C)	-25	2.15	2.00	1.87	1.76	1.62	1.51	—	—
	-20	2.39	2.21	2.07	1.95	1.79	1.66	—	—
	-15	2.60	2.41	2.25	2.11	1.96	1.81	1.61	—
	-10	2.70	2.53	2.38	2.25	2.11	1.98	1.80	—
	-7	2.76	2.61	2.46	2.33	2.21	2.09	1.91	—
	-2	3.05	2.89	2.72	2.56	2.43	2.31	2.10	—
	2	3.16	3.02	2.82	2.65	2.60	2.55	2.32	—
	7	3.78	3.62	3.45	3.29	3.17	3.06	2.85	2.23
	10	4.29	4.07	3.84	3.61	3.43	3.25	3.04	2.33
	12	4.58	4.34	4.07	3.81	3.60	3.38	3.16	2.41
	15	4.61	4.38	4.11	3.84	3.64	3.44	3.23	2.60
	20	4.68	4.46	4.18	3.90	3.72	3.54	3.35	2.92

* Heating capacity and power input are include defrost cycle data.
* Heating capacity and power input are shown at maximum compressor operating frequency.
* Power input does not include water pump power.
* Heating capacity and power input are measured in accordance with EN14511.

TO : Outdoor temperature (DB°C)
LWT : Leaving water temperature (°C)

Outdoor unit: HWT-1401H(R)W-E

Heating peak capacity and power input

Capacity (kW)		LWT (°C)							
		30	35	40	45	50	55	60	65
TO (°C)	-25	7.68	7.67	7.66	7.65	7.63	7.61	—	—
	-20	8.91	8.88	8.84	8.81	8.54	8.28	—	—
	-15	10.14	10.08	10.02	9.96	9.45	8.94	7.95	—
	-10	12.36	11.94	11.57	11.20	10.56	9.92	8.97	—
	-7	13.69	13.05	12.50	11.94	11.22	10.50	9.58	—
	-2	15.65	14.89	14.17	13.45	12.66	11.87	10.64	—
	2	16.93	16.13	15.45	14.77	13.85	12.93	11.53	—
	7	19.41	18.39	17.35	16.30	15.31	14.31	13.32	6.28
	10	20.65	19.57	18.48	17.39	16.30	15.22	14.14	6.25
	12	21.48	20.35	19.23	18.11	16.97	15.83	14.69	6.23
	15	20.80	19.71	18.57	17.44	16.37	15.31	14.25	6.73
	20	19.68	18.63	17.47	16.31	15.38	14.45	13.52	7.57

Power input (kW)		LWT (°C)							
		30	35	40	45	50	55	60	65
TO (°C)	-25	3.46	3.70	3.95	4.19	4.50	4.81	—	—
	-20	3.62	3.88	4.13	4.38	4.60	4.82	—	—
	-15	3.79	4.05	4.31	4.57	4.70	4.82	4.81	—
	-10	4.21	4.35	4.54	4.73	4.78	4.82	4.82	—
	-7	4.46	4.53	4.68	4.83	4.83	4.82	4.82	—
	-2	4.66	4.69	4.76	4.83	4.82	4.80	4.81	—
	2	4.61	4.62	4.66	4.69	4.69	4.68	4.67	—
	7	4.74	4.73	4.72	4.70	4.69	4.68	4.67	2.82
	10	4.71	4.71	4.72	4.73	4.71	4.68	4.66	2.68
	12	4.69	4.69	4.72	4.75	4.72	4.68	4.65	2.59
	15	4.51	4.50	4.52	4.54	4.50	4.46	4.41	2.59
	20	4.21	4.18	4.18	4.18	4.13	4.08	4.03	2.59

COP		LWT (°C)							
		30	35	40	45	50	55	60	65
TO (°C)	-25	2.22	2.07	1.94	1.83	1.70	1.58	—	—
	-20	2.46	2.29	2.14	2.01	1.86	1.72	—	—
	-15	2.68	2.49	2.32	2.18	2.01	1.85	1.65	—
	-10	2.94	2.74	2.55	2.37	2.21	2.06	1.86	—
	-7	3.07	2.88	2.67	2.47	2.33	2.18	1.99	—
	-2	3.36	3.17	2.98	2.78	2.63	2.47	2.21	—
	2	3.68	3.49	3.32	3.15	2.96	2.76	2.47	—
	7	4.09	3.89	3.68	3.47	3.26	3.06	2.85	2.23
	10	4.38	4.16	3.92	3.68	3.47	3.25	3.04	2.33
	12	4.58	4.34	4.07	3.81	3.60	3.38	3.16	2.41
	15	4.61	4.38	4.11	3.84	3.64	3.44	3.23	2.60
	20	4.68	4.46	4.18	3.90	3.72	3.54	3.35	2.92

* Heating capacity and power input are maximum (peak) value during operation.
* Heating capacity and power input are shown at maximum compressor operating frequency.
* Power input does not include water pump power.
* Heating capacity and power input are measured in accordance with EN14511.

TO : Outdoor temperature (DB°C)
LWT : Leaving water temperature (°C)

Outdoor unit: HWT-1401H(R)W-E

Cooling capacity and power input

Capacity (kW)		LWT (°C)				
		7	10	13	15	18
TO (°C)	20	11.60	12.46	13.44	13.90	14.76
	27	11.11	11.96	13.04	13.38	14.24
	30	10.89	11.74	12.87	13.16	14.01
	35	10.54	11.39	12.59	12.79	13.64
	40	7.09	8.01	9.02	9.54	10.47
	43	6.62	7.47	8.54	8.89	9.74

Power input (kW)		LWT (°C)				
		7	10	13	15	18
TO (°C)	20	2.99	3.02	3.01	3.08	3.11
	27	3.65	3.70	3.78	3.79	3.84
	30	3.94	4.00	4.12	4.10	4.16
	35	4.41	4.48	4.67	4.61	4.68
	40	3.65	3.65	3.64	3.65	3.65
	43	3.65	3.65	3.64	3.65	3.65

COP		LWT (°C)				
		7	10	13	15	18
TO (°C)	20	3.88	4.12	4.47	4.52	4.75
	27	3.04	3.23	3.45	3.53	3.71
	30	2.77	2.94	3.13	3.21	3.37
	35	2.39	2.54	2.70	2.78	2.91
	40	1.94	2.19	2.48	2.61	2.87
	43	1.81	2.05	2.35	2.44	2.67

* Cooling capacity and power input are shown at maximum compressor operating frequency.
* Power input does not include water pump power.
* Cooling capacity and power input are measured in accordance with EN14511.

TO : Outdoor temperature (DB°C)
LWT : Leaving water temperature (°C)

Outdoor unit: HWT-801H8(R)W-E

Average heating capacity and power input

Capacity (kW)		LWT (°C)							
		30	35	40	45	50	55	60	65
TO (°C)	-25	4.22	4.22	4.23	4.23	4.24	4.24	—	—
	-20	5.12	5.10	5.08	5.06	5.03	5.01	—	—
	-15	6.03	5.98	5.93	5.88	5.83	5.78	5.88	—
	-10	6.90	6.86	6.83	6.79	6.75	6.72	6.77	—
	-7	7.42	7.39	7.36	7.34	7.31	7.28	7.30	—
	-2	8.13	8.14	8.15	8.16	8.17	8.17	8.18	—
	2	8.70	8.74	8.78	8.82	8.85	8.89	8.89	—
	7	12.40	12.27	12.15	12.02	11.90	11.77	11.65	5.50
	10	13.00	12.86	12.72	12.58	12.45	12.31	12.17	5.95
	12	13.40	13.25	13.11	12.96	12.82	12.67	12.52	6.26
	15	14.00	13.84	13.68	13.53	13.37	13.21	13.05	6.71
	20	13.68	13.63	13.58	13.54	13.49	13.44	13.39	7.47

Power input (kW)		LWT (°C)							
		30	35	40	45	50	55	60	65
TO (°C)	-25	1.95	2.13	2.32	2.50	2.69	2.87	—	—
	-20	2.04	2.23	2.42	2.62	2.81	3.01	—	—
	-15	2.13	2.33	2.53	2.74	2.94	3.14	3.42	—
	-10	2.16	2.40	2.63	2.87	3.10	3.34	3.50	—
	-7	2.19	2.44	2.70	2.95	3.21	3.46	3.55	—
	-2	2.23	2.47	2.71	2.95	3.20	3.44	3.63	—
	2	2.26	2.49	2.72	2.96	3.19	3.42	3.70	—
	7	2.40	2.68	2.96	3.24	3.51	3.79	4.07	2.54
	10	2.38	2.66	2.94	3.23	3.51	3.79	4.07	2.54
	12	2.36	2.65	2.93	3.22	3.50	3.79	4.08	2.54
	15	2.34	2.63	2.92	3.21	3.50	3.79	4.08	2.53
	20	2.52	2.78	3.05	3.31	3.58	3.84	4.11	2.53

COP		LWT (°C)							
		30	35	40	45	50	55	60	65
TO (°C)	-25	2.17	1.98	1.83	1.69	1.58	1.48	—	—
	-20	2.52	2.29	2.09	1.93	1.79	1.67	—	—
	-15	2.83	2.57	2.34	2.15	1.98	1.84	1.72	—
	-10	3.19	2.86	2.59	2.37	2.18	2.01	1.93	—
	-7	3.39	3.03	2.73	2.49	2.28	2.10	2.05	—
	-2	3.65	3.30	3.01	2.76	2.56	2.38	2.25	—
	2	3.85	3.51	3.22	2.98	2.78	2.60	2.40	—
	7	5.16	4.58	4.11	3.72	3.39	3.11	2.86	2.17
	10	5.46	4.83	4.32	3.90	3.55	3.25	2.99	2.35
	12	5.67	5.00	4.47	4.03	3.66	3.34	3.07	2.47
	15	5.98	5.26	4.69	4.21	3.82	3.49	3.20	2.65
	20	5.44	4.90	4.46	4.09	3.77	3.50	3.26	2.95

* Heating capacity and power input are include defrost cycle data.
* Heating capacity and power input are shown at maximum compressor operating frequency.
* Power input does not include water pump power.
* Heating capacity and power input are measured in accordance with EN14511.

TO : Outdoor temperature (DB°C)
LWT : Leaving water temperature (°C)

Outdoor unit: HWT-801H8(R)W-E

Heating peak capacity and power input

Capacity (kW)		LWT (°C)							
		30	35	40	45	50	55	60	65
TO (°C)	-25	4.78	4.76	4.75	4.73	4.72	4.70	—	—
	-20	5.68	5.64	5.60	5.56	5.52	5.49	—	—
	-15	6.58	6.52	6.46	6.40	6.33	6.27	6.28	—
	-10	7.65	7.59	7.53	7.47	7.41	7.35	7.42	—
	-7	8.29	8.23	8.17	8.12	8.06	8.00	8.11	—
	-2	9.65	9.58	9.51	9.45	9.38	9.31	9.25	—
	2	10.74	10.66	10.59	10.51	10.44	10.36	10.17	—
	7	12.40	12.27	12.15	12.02	11.90	11.77	11.65	5.50
	10	13.00	12.86	12.72	12.58	12.45	12.31	12.17	5.95
	12	13.40	13.25	13.11	12.96	12.82	12.67	12.52	6.26
	15	14.00	13.84	13.68	13.53	13.37	13.21	13.05	6.71
	20	13.68	13.63	13.58	13.54	13.49	13.44	13.39	7.47

Power input (kW)		LWT (°C)							
		30	35	40	45	50	55	60	65
TO (°C)	-25	2.09	2.26	2.44	2.61	2.79	2.96	—	—
	-20	2.16	2.35	2.54	2.73	2.91	3.10	—	—
	-15	2.24	2.44	2.64	2.84	3.04	3.24	3.51	—
	-10	2.30	2.53	2.76	2.99	3.22	3.45	3.64	—
	-7	2.33	2.58	2.83	3.08	3.32	3.57	3.72	—
	-2	2.46	2.70	2.94	3.18	3.42	3.65	3.85	—
	2	2.57	2.80	3.03	3.26	3.49	3.72	3.96	—
	7	2.40	2.68	2.96	3.24	3.51	3.79	4.07	2.54
	10	2.38	2.66	2.94	3.23	3.51	3.79	4.07	2.54
	12	2.36	2.65	2.93	3.22	3.50	3.79	4.08	2.54
	15	2.34	2.63	2.92	3.21	3.50	3.79	4.08	2.53
	20	2.52	2.78	3.05	3.31	3.58	3.84	4.11	2.53

COP		LWT (°C)							
		30	35	40	45	50	55	60	65
TO (°C)	-25	2.29	2.11	1.95	1.81	1.69	1.59	—	—
	-20	2.63	2.40	2.21	2.04	1.90	1.77	—	—
	-15	2.94	2.67	2.45	2.25	2.08	1.94	1.79	—
	-10	3.33	3.00	2.73	2.50	2.30	2.13	2.04	—
	-7	3.55	3.19	2.89	2.64	2.43	2.24	2.18	—
	-2	3.91	3.55	3.24	2.97	2.75	2.55	2.40	—
	2	4.18	3.81	3.49	3.22	2.99	2.78	2.57	—
	7	5.16	4.58	4.11	3.72	3.39	3.11	2.86	2.17
	10	5.46	4.83	4.32	3.90	3.55	3.25	2.99	2.35
	12	5.67	5.00	4.47	4.03	3.66	3.34	3.07	2.47
	15	5.98	5.26	4.69	4.21	3.82	3.49	3.20	2.65
	20	5.44	4.90	4.46	4.09	3.77	3.50	3.26	2.95

* Heating capacity and power input are maximum (peak) value during operation.
* Heating capacity and power input are shown at maximum compressor operating frequency.
* Power input does not include water pump power.
* Heating capacity and power input are measured in accordance with EN14511.

TO : Outdoor temperature (DB°C)
LWT : Leaving water temperature (°C)

Outdoor unit: HWT-801H8(R)W-E

Cooling capacity and power input

Capacity (kW)		LWT (°C)				
		7	10	13	15	18
TO (°C)	20	8.07	8.74	9.41	9.88	10.58
	27	8.25	8.94	9.63	10.11	10.82
	30	7.95	8.61	9.27	9.73	10.43
	35	7.44	8.06	8.68	9.11	9.76
	40	5.81	6.89	7.97	8.43	9.12
	43	4.83	6.19	7.54	8.02	8.73

Power input (kW)		LWT (°C)				
		7	10	13	15	18
TO (°C)	20	1.95	1.90	1.85	1.85	1.84
	27	2.38	2.37	2.37	2.37	2.38
	30	2.48	2.49	2.50	2.51	2.53
	35	2.63	2.68	2.72	2.74	2.77
	40	2.85	2.92	3.00	3.02	3.05
	43	2.98	3.07	3.16	3.18	3.22

COP		LWT (°C)				
		7	10	13	15	18
TO (°C)	20	4.14	4.60	5.09	5.35	5.75
	27	3.46	3.77	4.07	4.26	4.54
	30	3.21	3.46	3.71	3.88	4.12
	35	2.83	3.01	3.19	3.33	3.52
	40	2.04	2.36	2.66	2.79	2.99
	43	1.62	2.01	2.39	2.52	2.71

* Cooling capacity and power input are shown at maximum compressor operating frequency.
* Power input does not include water pump power.
* Cooling capacity and power input are measured in accordance with EN14511.

TO : Outdoor temperature (DB°C)
LWT : Leaving water temperature (°C)

Outdoor unit: HWT-1101H8(R)W-E

Average heating capacity and power input

Capacity (kW)		LWT (°C)							
		30	35	40	45	50	55	60	65
TO (°C)	-25	5.43	5.37	5.31	5.26	5.20	5.14	—	—
	-20	6.45	6.40	6.35	6.30	6.25	6.20	—	—
	-15	7.48	7.43	7.39	7.34	7.30	7.25	7.28	—
	-10	8.43	8.41	8.39	8.37	8.35	8.33	8.29	—
	-7	9.00	8.99	8.99	8.98	8.98	8.97	8.89	—
	-2	9.32	9.43	9.55	9.67	9.79	9.91	9.90	—
	2	9.57	9.79	10.01	10.23	10.44	10.66	10.70	—
	7	15.63	15.50	15.37	15.24	15.10	14.97	14.84	5.50
	10	16.31	16.17	16.03	15.89	15.74	15.60	15.46	5.95
	12	16.77	16.62	16.47	16.32	16.17	16.02	15.87	6.26
	15	17.45	17.29	17.13	16.97	16.81	16.65	16.49	6.71
	20	16.88	16.81	16.75	16.68	16.62	16.55	16.49	7.47

Power input (kW)		LWT (°C)							
		30	35	40	45	50	55	60	65
TO (°C)	-25	2.27	2.54	2.82	3.09	3.37	3.64	—	—
	-20	2.40	2.68	2.96	3.23	3.51	3.79	—	—
	-15	2.54	2.82	3.10	3.38	3.65	3.93	4.26	—
	-10	2.61	2.91	3.21	3.51	3.81	4.11	4.34	—
	-7	2.65	2.96	3.28	3.59	3.91	4.22	4.38	—
	-2	2.63	2.94	3.26	3.57	3.88	4.19	4.46	—
	2	2.62	2.93	3.24	3.55	3.86	4.17	4.52	—
	7	3.35	3.66	3.97	4.28	4.59	4.90	5.21	2.54
	10	3.30	3.63	3.95	4.27	4.60	4.92	5.25	2.54
	12	3.27	3.60	3.94	4.27	4.60	4.94	5.27	2.54
	15	3.22	3.57	3.92	4.27	4.61	4.96	5.31	2.53
	20	3.40	3.72	4.04	4.36	4.68	5.00	5.32	2.53

COP		LWT (°C)							
		30	35	40	45	50	55	60	65
TO (°C)	-25	2.40	2.11	1.89	1.70	1.54	1.41	—	—
	-20	2.68	2.39	2.15	1.95	1.78	1.64	—	—
	-15	2.94	2.63	2.38	2.17	2.00	1.84	1.71	—
	-10	3.23	2.89	2.61	2.38	2.19	2.02	1.91	—
	-7	3.40	3.04	2.74	2.50	2.30	2.13	2.03	—
	-2	3.54	3.21	2.93	2.71	2.52	2.36	2.22	—
	2	3.65	3.34	3.09	2.88	2.71	2.56	2.37	—
	7	4.67	4.23	3.87	3.56	3.29	3.06	2.85	2.17
	10	4.94	4.46	4.06	3.72	3.42	3.17	2.95	2.35
	12	5.13	4.61	4.18	3.82	3.51	3.24	3.01	2.47
	15	5.42	4.84	4.37	3.98	3.64	3.36	3.11	2.65
	20	4.96	4.52	4.14	3.83	3.55	3.31	3.10	2.95

* Heating capacity and power input are include defrost cycle data.
* Heating capacity and power input are shown at maximum compressor operating frequency.
* Power input does not include water pump power.
* Heating capacity and power input are measured in accordance with EN14511.

TO : Outdoor temperature (DB°C)
LWT : Leaving water temperature (°C)

Outdoor unit: HWT-1101H8(R)W-E

Heating peak capacity and power input

Capacity (kW)		LWT (°C)							
		30	35	40	45	50	55	60	65
TO (°C)	-25	6.14	6.02	5.90	5.79	5.67	5.55	—	—
	-20	7.12	7.03	6.94	6.85	6.76	6.67	—	—
	-15	8.09	8.03	7.97	7.91	7.84	7.78	7.80	—
	-10	9.64	9.57	9.49	9.42	9.35	9.27	9.25	—
	-7	10.57	10.49	10.41	10.33	10.25	10.17	10.12	—
	-2	12.34	12.21	12.07	11.94	11.80	11.66	11.57	—
	2	13.76	13.58	13.40	13.22	13.04	12.86	12.73	—
	7	15.63	15.50	15.37	15.24	15.10	14.97	14.84	5.50
	10	16.31	16.17	16.03	15.89	15.74	15.60	15.46	5.95
	12	16.77	16.62	16.47	16.32	16.17	16.02	15.87	6.26
	15	17.45	17.29	17.13	16.97	16.81	16.65	16.49	6.71
	20	16.88	16.81	16.75	16.68	16.62	16.55	16.49	7.47

Power input (kW)		LWT (°C)							
		30	35	40	45	50	55	60	65
TO (°C)	-25	2.43	2.70	2.97	3.24	3.50	3.77	—	—
	-20	2.56	2.83	3.10	3.38	3.65	3.93	—	—
	-15	2.68	2.96	3.24	3.52	3.80	4.08	4.43	—
	-10	2.82	3.13	3.44	3.75	4.06	4.37	4.61	—
	-7	2.90	3.23	3.56	3.89	4.21	4.54	4.72	—
	-2	3.12	3.42	3.72	4.02	4.31	4.61	4.90	—
	2	3.30	3.57	3.85	4.12	4.40	4.67	5.04	—
	7	3.35	3.66	3.97	4.28	4.59	4.90	5.21	2.54
	10	3.30	3.63	3.95	4.27	4.60	4.92	5.25	2.54
	12	3.27	3.60	3.94	4.27	4.60	4.94	5.27	2.54
	15	3.22	3.57	3.92	4.27	4.61	4.96	5.31	2.53
	20	3.40	3.72	4.04	4.36	4.68	5.00	5.32	2.53

COP		LWT (°C)							
		30	35	40	45	50	55	60	65
TO (°C)	-25	2.52	2.23	1.99	1.79	1.62	1.47	—	—
	-20	2.78	2.48	2.23	2.03	1.85	1.70	—	—
	-15	3.02	2.71	2.46	2.25	2.06	1.91	1.76	—
	-10	3.42	3.06	2.76	2.51	2.30	2.12	2.01	—
	-7	3.64	3.25	2.93	2.66	2.43	2.24	2.15	—
	-2	3.96	3.57	3.25	2.97	2.74	2.53	2.36	—
	2	4.18	3.80	3.49	3.21	2.97	2.75	2.53	—
	7	4.67	4.23	3.87	3.56	3.29	3.06	2.85	2.17
	10	4.94	4.46	4.06	3.72	3.42	3.17	2.95	2.35
	12	5.13	4.61	4.18	3.82	3.51	3.24	3.01	2.47
	15	5.42	4.84	4.37	3.98	3.64	3.36	3.11	2.65
	20	4.96	4.52	4.14	3.83	3.55	3.31	3.10	2.95

* Heating capacity and power input are maximum (peak) value during operation.
* Heating capacity and power input are shown at maximum compressor operating frequency.
* Power input does not include water pump power.
* Heating capacity and power input are measured in accordance with EN14511.

TO : Outdoor temperature (DB°C)
LWT : Leaving water temperature (°C)

Outdoor unit: HWT-1101H8(R)W-E

Cooling capacity and power input

Capacity (kW)		LWT (°C)				
		7	10	13	15	18
TO (°C)	20	9.40	10.17	10.94	11.49	12.32
	27	9.68	10.48	11.28	11.83	12.65
	30	9.35	10.13	10.91	11.43	12.21
	35	8.81	9.55	10.28	10.76	11.47
	40	6.90	8.06	9.22	9.81	10.70
	43	5.75	7.17	8.58	9.24	10.23

Power input (kW)		LWT (°C)				
		7	10	13	15	18
TO (°C)	20	2.33	2.35	2.36	2.33	2.28
	27	2.92	2.96	2.99	2.99	2.99
	30	3.06	3.11	3.15	3.17	3.19
	35	3.29	3.36	3.42	3.46	3.52
	40	3.50	3.60	3.70	3.75	3.81
	43	3.62	3.75	3.87	3.92	3.99

COP		LWT (°C)				
		7	10	13	15	18
TO (°C)	20	4.03	4.34	4.64	4.94	5.40
	27	3.32	3.55	3.77	3.95	4.23
	30	3.06	3.26	3.46	3.61	3.83
	35	2.68	2.85	3.01	3.11	3.26
	40	1.97	2.24	2.49	2.62	2.80
	43	1.59	1.91	2.22	2.36	2.56

* Cooling capacity and power input are shown at maximum compressor operating frequency.
* Power input does not include water pump power.
* Cooling capacity and power input are measured in accordance with EN14511.

TO : Outdoor temperature (DB°C)
LWT : Leaving water temperature (°C)

Outdoor unit: HWT-1401H8(R)W-E

Average heating capacity and power input

Capacity (kW)		LWT (°C)							
		30	35	40	45	50	55	60	65
TO (°C)	-25	7.08	7.07	7.02	6.97	6.92	6.87	—	—
	-20	8.28	8.17	8.06	7.95	7.84	7.73	—	—
	-15	9.48	9.27	9.30	9.32	9.35	9.37	9.49	—
	-10	10.01	9.85	10.07	10.30	10.52	10.75	10.14	—
	-7	10.33	10.19	10.54	10.88	11.23	11.57	11.30	—
	-2	11.67	11.38	11.79	12.19	12.60	13.00	13.30	—
	2	10.81	10.80	10.86	10.92	10.98	11.04	11.71	—
	7	15.15	14.98	15.11	15.24	15.37	15.50	15.63	6.28
	10	18.95	18.20	18.19	18.18	18.17	18.16	18.15	6.25
	12	21.48	20.35	20.25	20.14	20.04	19.93	19.83	6.23
	15	21.25	20.35	20.09	19.83	19.58	19.32	19.06	6.73
	20	20.86	20.35	19.84	19.33	18.81	18.30	17.79	7.57

Power input (kW)		LWT (°C)							
		30	35	40	45	50	55	60	65
TO (°C)	-25	3.29	3.53	3.77	4.01	4.24	4.48	—	—
	-20	3.47	3.69	3.92	4.16	4.39	4.62	—	—
	-15	3.65	3.85	4.12	4.40	4.67	4.94	5.38	—
	-10	3.70	3.89	4.20	4.51	4.83	5.14	5.38	—
	-7	3.74	3.91	4.25	4.59	4.92	5.26	5.66	—
	-2	3.82	3.94	4.32	4.70	5.07	5.45	6.02	—
	2	3.42	3.58	3.90	4.23	4.55	4.87	5.38	—
	7	4.01	4.14	4.51	4.87	5.24	5.60	5.97	2.82
	10	4.42	4.47	4.85	5.23	5.61	5.99	6.37	2.68
	12	4.69	4.69	5.08	5.47	5.86	6.25	6.64	2.59
	15	4.54	4.64	4.98	5.32	5.66	6.01	6.35	2.59
	20	4.29	4.55	4.81	5.08	5.34	5.60	5.86	2.59

COP		LWT (°C)							
		30	35	40	45	50	55	60	65
TO (°C)	-25	2.15	2.00	1.86	1.74	1.63	1.53	—	—
	-20	2.39	2.21	2.05	1.91	1.79	1.67	—	—
	-15	2.60	2.41	2.25	2.12	2.00	1.90	1.76	—
	-10	2.70	2.53	2.40	2.28	2.18	2.09	1.89	—
	-7	2.76	2.61	2.48	2.37	2.28	2.20	2.00	—
	-2	3.05	2.89	2.73	2.60	2.48	2.39	2.21	—
	2	3.16	3.02	2.78	2.58	2.41	2.27	2.18	—
	7	3.78	3.62	3.35	3.13	2.94	2.77	2.62	2.23
	10	4.29	4.07	3.75	3.48	3.24	3.03	2.85	2.33
	12	4.58	4.34	3.99	3.68	3.42	3.19	2.99	2.41
	15	4.68	4.39	4.03	3.73	3.46	3.22	3.00	2.60
	20	4.87	4.47	4.12	3.81	3.52	3.27	3.03	2.92

* Heating capacity and power input are include defrost cycle data.
* Heating capacity and power input are shown at maximum compressor operating frequency.
* Power input does not include water pump power.
* Heating capacity and power input are measured in accordance with EN14511.

TO : Outdoor temperature (DB°C)
LWT : Leaving water temperature (°C)

Outdoor unit: HWT-1401H8(R)W-E

Heating peak capacity and power input

Capacity (kW)		LWT (°C)							
		30	35	40	45	50	55	60	65
TO (°C)	-25	7.68	7.67	7.68	7.69	7.69	7.70	—	—
	-20	8.91	8.88	8.82	8.77	8.72	8.67	—	—
	-15	10.14	10.08	10.07	10.07	10.06	10.05	10.20	—
	-10	12.36	11.94	11.90	11.86	11.82	11.78	11.82	—
	-7	13.69	13.05	12.99	12.93	12.87	12.81	12.86	—
	-2	15.65	14.89	14.79	14.68	14.58	14.47	14.43	—
	2	16.93	16.13	16.15	16.17	16.18	16.20	15.72	—
	7	19.41	18.39	18.27	18.14	18.02	17.89	17.77	6.28
	10	20.65	19.57	19.45	19.34	19.23	19.11	19.00	6.25
	12	21.48	20.35	20.25	20.14	20.04	19.93	19.83	6.23
	15	21.25	20.35	20.09	19.83	19.58	19.32	19.06	6.73
	20	20.86	20.35	19.84	19.33	18.81	18.30	17.79	7.57

Power input (kW)		LWT (°C)							
		30	35	40	45	50	55	60	65
TO (°C)	-25	3.46	3.70	3.95	4.20	4.44	4.69	—	—
	-20	3.62	3.88	4.12	4.37	4.62	4.87	—	—
	-15	3.79	4.05	4.32	4.60	4.87	5.14	5.62	—
	-10	4.21	4.35	4.61	4.88	5.14	5.40	5.87	—
	-7	4.46	4.53	4.79	5.05	5.30	5.56	6.10	—
	-2	4.66	4.69	4.96	5.23	5.50	5.77	6.32	—
	2	4.61	4.62	4.99	5.36	5.73	6.10	6.46	—
	7	4.74	4.73	5.10	5.46	5.83	6.19	6.56	2.82
	10	4.71	4.71	5.09	5.47	5.85	6.23	6.61	2.68
	12	4.69	4.69	5.08	5.47	5.86	6.25	6.64	2.59
	15	4.54	4.64	4.98	5.32	5.66	6.01	6.35	2.59
	20	4.29	4.55	4.81	5.08	5.34	5.60	5.86	2.59

COP		LWT (°C)							
		30	35	40	45	50	55	60	65
TO (°C)	-25	2.22	2.07	1.94	1.83	1.73	1.64	—	—
	-20	2.46	2.29	2.14	2.01	1.89	1.78	—	—
	-15	2.68	2.49	2.33	2.19	2.07	1.96	1.81	—
	-10	2.94	2.74	2.58	2.43	2.30	2.18	2.02	—
	-7	3.07	2.88	2.71	2.56	2.43	2.30	2.11	—
	-2	3.36	3.17	2.98	2.81	2.65	2.51	2.28	—
	2	3.68	3.49	3.24	3.02	2.82	2.66	2.43	—
	7	4.09	3.89	3.58	3.32	3.09	2.89	2.71	2.23
	10	4.38	4.16	3.82	3.54	3.29	3.07	2.88	2.33
	12	4.58	4.34	3.99	3.68	3.42	3.19	2.99	2.41
	15	4.68	4.39	4.03	3.73	3.46	3.22	3.00	2.60
	20	4.87	4.47	4.12	3.81	3.52	3.27	3.03	2.92

* Heating capacity and power input are maximum (peak) value during operation.
* Heating capacity and power input are shown at maximum compressor operating frequency.
* Power input does not include water pump power.
* Heating capacity and power input are measured in accordance with EN14511.

TO : Outdoor temperature (DB°C)
LWT : Leaving water temperature (°C)

Outdoor unit: HWT-1401H8(R)W-E

Cooling capacity and power input

Capacity (kW)		LWT (°C)				
		7	10	13	15	18
TO (°C)	20	11.60	12.46	13.44	13.90	14.76
	27	11.11	11.96	13.04	13.38	14.24
	30	10.89	11.74	12.87	13.16	14.01
	35	10.54	11.39	12.59	12.79	13.64
	40	9.26	10.31	11.35	11.58	11.92
	43	8.49	9.55	10.61	10.72	10.89

Power input (kW)		LWT (°C)				
		7	10	13	15	18
TO (°C)	20	2.99	3.02	3.01	3.08	3.11
	27	3.65	3.70	3.78	3.79	3.84
	30	3.94	4.00	4.12	4.10	4.16
	35	4.41	4.48	4.67	4.61	4.68
	40	4.71	4.76	4.81	4.68	4.48
	43	4.89	4.90	4.90	4.68	4.36

COP		LWT (°C)				
		7	10	13	15	18
TO (°C)	20	3.88	4.12	4.47	4.52	4.75
	27	3.04	3.23	3.45	3.53	3.71
	30	2.77	2.94	3.13	3.21	3.37
	35	2.39	2.54	2.70	2.78	2.91
	40	1.97	2.16	2.36	2.47	2.66
	43	1.74	1.95	2.17	2.29	2.50

* Cooling capacity and power input are shown at maximum compressor operating frequency.
* Power input does not include water pump power.
* Cooling capacity and power input are measured in accordance with EN14511.

TO : Outdoor temperature (DB°C)
LWT : Leaving water temperature (°C)

2-6. Part Load Tables

Specifications part load heating capacity and input (Peak)LWT (°C) =35°C

Outdoor unit HWT-401HW-E

Capacity (kW)		Load (%)									
		100	90	80	70	60	50	40	30	20	10
TO (°C)	-20	3.10	2.80	2.49	2.19	1.88	1.58	1.28	0.98	0.98	0.98
	-15	3.73	3.37	3.00	2.64	2.27	1.91	1.54	1.17	1.17	1.17
	-10	4.40	3.99	3.57	3.16	2.75	2.34	1.89	1.45	1.45	1.45
	-7	4.80	4.36	3.92	3.47	3.03	2.59	2.08	1.61	1.61	1.61
	-2	5.70	5.11	4.51	3.92	3.33	2.78	2.20	1.64	1.50	1.50
	2	6.42	5.71	4.99	4.28	3.56	2.93	2.30	1.67	1.04	1.04
	7	7.25	6.47	5.69	4.90	4.12	3.45	2.79	2.12	1.46	0.79
	10	7.95	7.08	6.20	5.33	4.46	3.74	3.03	2.31	1.60	0.88
	12	8.42	7.49	6.55	5.62	4.68	3.93	3.18	2.44	1.69	0.94
	15	8.63	7.70	6.77	5.84	4.91	4.13	3.36	2.58	1.80	1.03
	20	8.98	8.06	7.14	6.21	5.29	4.47	3.64	2.82	1.99	1.17

Power input (kW)		Load (%)									
		100	90	80	70	60	50	40	30	20	10
TO (°C)	-20	1.32	1.21	1.09	0.98	0.86	0.75	0.64	0.52	0.52	0.52
	-15	1.41	1.28	1.16	1.03	0.91	0.78	0.67	0.55	0.55	0.55
	-10	1.46	1.34	1.21	1.08	0.94	0.81	0.69	0.56	0.56	0.56
	-7	1.49	1.36	1.22	1.09	0.95	0.82	0.70	0.57	0.57	0.57
	-2	1.51	1.35	1.19	1.04	0.88	0.75	0.62	0.49	0.48	0.48
	2	1.52	1.35	1.17	1.00	0.82	0.69	0.56	0.43	0.30	0.30
	7	1.49	1.31	1.13	0.95	0.77	0.65	0.54	0.42	0.30	0.23
	10	1.48	1.30	1.12	0.94	0.76	0.65	0.54	0.43	0.31	0.22
	12	1.48	1.30	1.12	0.94	0.76	0.65	0.54	0.43	0.32	0.21
	15	1.48	1.30	1.12	0.93	0.75	0.64	0.53	0.42	0.31	0.20
	20	1.48	1.30	1.11	0.93	0.74	0.63	0.52	0.41	0.30	0.19

COP		Load (%)									
		100	90	80	70	60	50	40	30	20	10
TO (°C)	-20	2.35	2.32	2.28	2.24	2.18	2.11	2.02	1.88	1.88	1.88
	-15	2.65	2.62	2.59	2.56	2.51	2.45	2.32	2.13	2.13	2.13
	-10	3.01	2.98	2.96	2.94	2.91	2.89	2.73	2.56	2.56	2.56
	-7	3.22	3.21	3.20	3.19	3.18	3.16	3.00	2.82	2.82	2.82
	-2	3.78	3.78	3.78	3.78	3.78	3.72	3.55	3.34	3.14	3.14
	2	4.22	4.24	4.26	4.30	4.34	4.25	4.11	3.88	3.47	3.47
	7	4.87	4.94	5.03	5.16	5.35	5.29	5.21	5.08	4.85	3.43
	10	5.36	5.43	5.52	5.65	5.83	5.75	5.62	5.44	5.11	4.04
	12	5.69	5.76	5.85	5.97	6.16	6.05	5.90	5.67	5.28	4.48
	15	5.83	5.93	6.06	6.25	6.52	6.43	6.30	6.10	5.77	5.07
	20	6.07	6.22	6.43	6.72	7.15	7.09	7.00	6.87	6.65	6.16

* Heating capacity and power input are maximum (peak) value during operation.
* Heating capacity and power input at 100% load are shown at maximum compressor operating frequency.
* Power input does not include water pump power.
* Heating capacity and power input are measured in accordance with EN14511.

TO : Outdoor temperature (DB°C)
LWT : Leaving water temperature (°C)

Specifications part load heating capacity and input (Peak)LWT (°C) =45°C

Outdoor unit HWT-401HW-E

Capacity (kW)		Load (%)									
		100	90	80	70	60	50	40	30	20	10
TO (°C)	-20	—	—	—	—	—	—	—	—	—	—
	-15	3.37	3.41	3.08	2.76	2.43	1.75	1.40	1.05	1.05	1.05
	-10	4.06	3.68	3.30	2.92	2.54	2.16	1.73	1.29	1.29	1.29
	-7	4.48	4.06	3.65	3.23	2.82	2.40	1.92	1.44	1.44	1.44
	-2	5.32	4.76	4.21	3.66	3.10	2.68	2.22	1.77	1.77	1.77
	2	5.99	5.33	4.66	4.00	3.33	2.90	2.46	2.03	2.03	2.03
	7	6.97	6.18	5.39	4.60	3.81	3.13	2.44	2.44	2.44	2.44
	10	7.64	6.78	5.93	5.07	4.21	3.45	2.69	2.69	2.69	2.69
	12	8.09	7.19	6.29	5.38	4.48	3.67	2.86	2.86	2.86	2.86
	15	8.31	7.41	6.51	5.61	4.72	3.85	2.98	2.98	2.98	2.98
	20	8.67	7.78	6.89	6.00	5.11	4.14	3.17	3.17	3.17	3.17

Power input (kW)		Load (%)									
		100	90	80	70	60	50	40	30	20	10
TO (°C)	-20	—	—	—	—	—	—	—	—	—	—
	-15	1.60	1.46	1.32	1.18	1.04	0.90	0.77	0.64	0.63	0.63
	-10	1.69	1.54	1.39	1.23	1.08	0.95	0.82	0.67	0.67	0.67
	-7	1.73	1.58	1.43	1.27	1.12	0.97	0.83	0.69	0.68	0.68
	-2	1.79	1.60	1.42	1.24	1.06	0.93	0.80	0.67	0.67	0.67
	2	1.83	1.63	1.42	1.22	1.01	0.89	0.78	0.66	0.66	0.66
	7	1.82	1.61	1.40	1.19	0.98	0.83	0.68	0.68	0.68	0.68
	10	1.83	1.62	1.41	1.19	0.98	0.82	0.67	0.67	0.67	0.67
	12	1.84	1.63	1.41	1.20	0.98	0.82	0.66	0.66	0.66	0.66
	15	1.84	1.63	1.41	1.19	0.98	0.82	0.66	0.66	0.66	0.66
	20	1.85	1.63	1.41	1.19	0.97	0.81	0.65	0.65	0.65	0.65

COP		Load (%)									
		100	90	80	70	60	50	40	30	20	10
TO (°C)	-20	—	—	—	—	—	—	—	—	—	—
	-15	2.11	2.33	2.33	2.34	2.34	1.94	1.82	1.64	1.67	1.67
	-10	2.41	2.39	2.38	2.36	2.35	2.28	2.10	1.92	1.92	1.92
	-7	2.59	2.58	2.56	2.54	2.51	2.47	2.31	2.09	2.12	2.12
	-2	2.98	2.97	2.96	2.95	2.93	2.89	2.78	2.63	2.64	2.64
	2	3.27	3.28	3.28	3.29	3.30	3.24	3.17	3.08	3.08	3.08
	7	3.83	3.84	3.85	3.87	3.89	3.77	3.59	3.59	3.59	3.59
	10	4.17	4.19	4.22	4.25	4.30	4.19	4.03	4.03	4.03	4.03
	12	4.40	4.42	4.46	4.50	4.57	4.48	4.33	4.33	4.33	4.33
	15	4.51	4.55	4.62	4.71	4.83	4.71	4.54	4.54	4.54	4.54
	20	4.69	4.77	4.89	5.04	5.27	5.11	4.88	4.88	4.88	4.88

* Heating capacity and power input are maximum (peak) value during operation.
* Heating capacity and power input at 100% load are shown at maximum compressor operating frequency.
* Power input does not include water pump power.
* Heating capacity and power input are measured in accordance with EN14511.

TO : Outdoor temperature (DB°C)
LWT : Leaving water temperature (°C)

Specifications part load heating capacity and input (Peak)LWT (°C) =55°C

Outdoor unit HWT-401HW-E

Capacity (kW)		Load (%)									
		100	90	80	70	60	50	40	30	20	10
TO (°C)	-20	—	—	—	—	—	—	—	—	—	—
	-15	—	—	—	—	—	—	—	—	—	—
	-10	—	—	—	—	—	—	—	—	—	—
	-7	4.31	3.86	3.40	3.40	3.40	3.40	3.40	3.40	3.40	3.40
	-2	4.98	4.49	4.01	3.72	3.44	3.15	2.92	2.92	2.92	2.92
	2	5.52	5.01	4.49	3.98	3.46	2.95	2.54	2.54	2.54	2.54
	7	6.51	5.77	5.04	4.30	3.56	3.11	2.67	2.22	2.22	2.22
	10	7.18	6.37	5.57	4.77	3.96	3.31	2.66	2.48	2.48	2.48
	12	7.62	6.77	5.93	5.08	4.23	3.44	2.65	2.65	2.65	2.65
	15	7.79	6.94	6.09	5.24	4.39	3.59	2.80	2.80	2.80	2.80
	20	8.06	7.21	6.36	5.51	4.66	3.85	3.04	3.04	3.04	3.04

Power input (kW)		Load (%)									
		100	90	80	70	60	50	40	30	20	10
TO (°C)	-20	—	—	—	—	—	—	—	—	—	—
	-15	—	—	—	—	—	—	—	—	—	—
	-10	—	—	—	—	—	—	—	—	—	—
	-7	2.03	1.87	1.71	1.71	1.71	1.71	1.71	1.71	1.71	1.71
	-2	2.11	1.93	1.75	1.64	1.53	1.43	1.36	1.36	1.36	1.36
	2	2.17	1.98	1.78	1.59	1.39	1.20	1.08	1.08	1.08	1.08
	7	2.15	1.91	1.67	1.43	1.19	1.07	0.96	0.84	0.84	0.84
	10	2.17	1.93	1.68	1.44	1.19	1.07	0.95	0.90	0.90	0.90
	12	2.19	1.94	1.69	1.44	1.19	1.07	0.94	0.94	0.94	0.94
	15	2.19	1.94	1.69	1.44	1.20	1.05	0.90	0.90	0.90	0.90
	20	2.18	1.94	1.70	1.45	1.21	1.02	0.83	0.83	0.83	0.83

COP		Load (%)									
		100	90	80	70	60	50	40	30	20	10
TO (°C)	-20	—	—	—	—	—	—	—	—	—	—
	-15	—	—	—	—	—	—	—	—	—	—
	-10	—	—	—	—	—	—	—	—	—	—
	-7	2.12	2.06	1.99	1.99	1.99	1.99	1.99	1.99	1.99	1.99
	-2	2.36	2.33	2.29	2.27	2.24	2.21	2.15	2.15	2.15	2.15
	2	2.54	2.53	2.52	2.51	2.48	2.46	2.35	2.35	2.35	2.35
	7	3.03	3.02	3.01	3.01	2.99	2.90	2.79	2.64	2.64	2.64
	10	3.30	3.31	3.31	3.32	3.33	3.10	2.81	2.75	2.75	2.75
	12	3.48	3.49	3.51	3.53	3.55	3.23	2.82	2.82	2.82	2.82
	15	3.56	3.58	3.60	3.63	3.67	3.43	3.11	3.11	3.11	3.11
	20	3.70	3.72	3.75	3.79	3.85	3.77	3.66	3.66	3.66	3.66

* Heating capacity and power input are maximum (peak) value during operation.
* Heating capacity and power input are shown at maximum compressor operating frequency.
* Power input does not include water pump power.
* Heating capacity and power input are measured in accordance with EN14511.

TO : Outdoor temperature (DB°C)
LWT : Leaving water temperature (°C)

Specifications Low noise operation

Outdoor unit HWT-401HW-E

Capacity (kW)		LWT (°C)		
		35	45	55
TO (°C)	-20	1.35	—	—
	-15	1.54	1.40	—
	-10	1.63	1.46	—
	-7	1.68	1.49	1.30
	-2	2.04	1.82	1.61
	2	2.32	2.09	1.86
	7	2.85	2.53	2.20
	10	3.00	2.74	2.43
	12	3.10	2.88	2.58
	15	3.24	3.09	2.80
	20	3.49	3.44	3.18

Power input (kW)		LWT (°C)		
		35	45	55
TO (°C)	-20	0.64	—	—
	-15	0.66	0.77	—
	-10	0.61	0.72	—
	-7	0.58	0.70	0.81
	-2	0.59	0.71	0.84
	2	0.59	0.73	0.87
	7	0.59	0.77	0.94
	10	0.59	0.76	0.94
	12	0.58	0.76	0.94
	15	0.58	0.76	0.94
	20	0.57	0.75	0.94

COP		LWT (°C)		
		35	45	55
TO (°C)	-20	2.11	—	—
	-15	2.33	1.82	—
	-10	2.69	2.02	—
	-7	2.90	2.14	1.60
	-2	3.48	2.55	1.91
	2	3.93	2.86	2.14
	7	4.83	3.30	2.34
	10	5.12	3.59	2.58
	12	5.32	3.79	2.74
	15	5.62	4.09	2.98
	20	6.12	4.59	3.38

* Power input does not include water pump power.
* Heating capacity and power input are measured in accordance with EN14511.

TO : Outdoor temperature (DB°C)
LWT : Leaving water temperature (°C)

Specifications part load cooling capacity and input LWT (°C) =7°C

Outdoor unit HWT-401HW-E

Capacity (kW)		Load (%)									
		100	90	80	70	60	50	40	30	20	10
TO (℃)	20	5.47	4.92	4.38	3.83	3.24	2.65	2.07	1.48	0.89	0.89
	27	5.13	4.64	4.16	3.67	3.17	2.61	2.06	1.51	0.96	0.96
	30	4.98	4.41	3.96	3.50	3.02	2.50	1.98	1.46	0.99	0.99
	35	4.74	4.33	3.91	3.50	3.08	2.57	2.06	1.55	1.04	1.04
	40	4.00	3.64	3.28	2.91	2.55	2.13	1.70	1.28	1.09	1.09
	43	3.56	3.23	2.90	2.56	2.23	1.86	1.49	1.12	1.12	1.12

Power input (kW)		Load (%)									
		100	90	80	70	60	50	40	30	20	10
TO (℃)	20	1.03	0.89	0.76	0.62	0.53	0.43	0.34	0.24	0.15	0.15
	27	1.20	1.07	0.93	0.80	0.69	0.59	0.48	0.37	0.27	0.27
	30	1.27	1.14	1.01	0.87	0.76	0.66	0.55	0.42	0.33	0.33
	35	1.39	1.26	1.14	1.01	0.88	0.76	0.64	0.52	0.40	0.40
	40	1.51	1.38	1.24	1.11	0.98	0.89	0.77	0.57	0.53	0.53
	43	1.58	1.45	1.31	1.18	1.04	0.97	0.84	0.60	0.60	0.60

COP		Load (%)									
		100	90	80	70	60	50	40	30	20	10
TO (℃)	20	5.31	5.51	5.78	6.18	6.16	6.14	6.11	6.06	5.93	5.93
	27	4.28	4.36	4.46	4.59	4.58	4.47	4.31	4.05	3.60	3.60
	30	3.92	3.88	3.94	4.01	3.99	3.82	3.63	3.49	3.03	3.03
	35	3.41	3.43	3.44	3.47	3.50	3.38	3.22	2.98	2.60	2.60
	40	2.65	2.64	2.63	2.62	2.60	2.39	2.22	2.25	2.08	2.08
	43	2.25	2.23	2.21	2.18	2.14	1.93	1.77	1.87	1.87	1.87

* Cooling capacity and power input at 100% load are shown at maximum compressor operating frequency.
* Power input does not include water pump power.
* Cooling capacity and power input at 100% load are measured in accordance with EN14511.

TO : Outdoor temperature (DB°C)
LWT : Leaving water temperature (°C)

Specifications part load cooling capacity and input LWT (°C) =13°C

Outdoor unit HWT-401HW-E

Capacity (kW)		Load (%)									
		100	90	80	70	60	50	40	30	20	10
TO (℃)	20	6.24	5.66	5.08	4.50	3.91	3.31	2.72	2.13	1.53	0.94
	27	5.98	5.44	4.89	4.35	3.80	3.21	2.62	2.03	1.45	1.13
	30	5.87	5.27	4.75	4.22	3.69	3.13	2.56	2.00	1.43	1.19
	35	5.69	5.19	4.68	4.18	3.67	3.09	2.51	1.93	1.35	1.35
	40	5.16	4.71	4.25	3.80	3.35	2.85	2.36	1.86	1.37	1.37
	43	4.84	4.42	4.00	3.57	3.15	2.71	2.27	1.82	1.38	1.38

Power input (kW)		Load (%)									
		100	90	80	70	60	50	40	30	20	10
TO (℃)	20	1.18	0.99	0.80	0.61	0.53	0.44	0.36	0.27	0.19	0.10
	27	1.30	1.13	0.96	0.80	0.69	0.58	0.48	0.38	0.27	0.23
	30	1.35	1.20	1.04	0.88	0.76	0.65	0.54	0.43	0.32	0.29
	35	1.43	1.29	1.15	1.01	0.87	0.75	0.62	0.50	0.37	0.37
	40	1.57	1.42	1.28	1.14	1.00	0.87	0.75	0.62	0.50	0.50
	43	1.65	1.51	1.36	1.22	1.07	0.95	0.83	0.70	0.58	0.58

COP		Load (%)									
		100	90	80	70	60	50	40	30	20	10
TO (℃)	20	5.29	5.72	6.35	7.38	7.44	7.53	7.66	7.88	8.29	9.40
	27	4.61	4.81	5.08	5.46	5.53	5.51	5.48	5.43	5.34	5.01
	30	4.36	4.40	4.58	4.82	4.88	4.82	4.73	4.61	4.41	4.10
	35	3.98	4.02	4.07	4.13	4.22	4.15	4.05	3.90	3.65	3.65
	40	3.29	3.30	3.32	3.34	3.36	3.27	3.15	2.98	2.73	2.73
	43	2.93	2.94	2.94	2.94	2.94	2.86	2.75	2.59	2.38	2.38

* Cooling capacity and power input at 100% load are shown at maximum compressor operating frequency.
* Power input does not include water pump power.
* Cooling capacity and power input at 100% load are measured in accordance with EN14511.

TO : Outdoor temperature (DB°C)
LWT : Leaving water temperature (°C)

Specifications part load cooling capacity and input LWT (°C) =18°C

Outdoor unit HWT-401HW-E

Capacity (kW)		Load (%)									
		100	90	80	70	60	50	40	30	20	10
TO (℃)	20	7.19	6.45	5.72	4.98	4.34	3.69	3.05	2.41	1.76	1.12
	27	6.79	6.09	5.38	4.67	4.06	3.46	2.85	2.24	1.64	1.29
	30	6.62	5.89	5.20	4.51	3.92	3.33	2.74	2.15	1.63	1.37
	35	6.34	5.67	4.99	4.32	3.75	3.19	2.62	2.06	1.49	1.49
	40	5.87	5.23	4.59	3.95	3.42	2.90	2.37	1.84	1.63	1.63
	43	5.59	4.97	4.35	3.73	3.23	2.72	2.22	1.71	1.71	1.71

Power input (kW)		Load (%)									
		100	90	80	70	60	50	40	30	20	10
TO (℃)	20	1.13	0.95	0.78	0.60	0.52	0.43	0.35	0.26	0.18	0.09
	27	1.28	1.09	0.91	0.72	0.63	0.53	0.44	0.35	0.25	0.21
	30	1.34	1.16	0.97	0.78	0.68	0.58	0.48	0.39	0.30	0.27
	35	1.45	1.25	1.06	0.86	0.76	0.65	0.55	0.44	0.34	0.34
	40	1.59	1.39	1.19	0.99	0.87	0.75	0.63	0.52	0.48	0.48
	43	1.68	1.47	1.27	1.06	0.94	0.81	0.69	0.56	0.56	0.56

COP		Load (%)									
		100	90	80	70	60	50	40	30	20	10
TO (℃)	20	6.36	6.77	7.36	8.30	8.42	8.59	8.84	9.26	10.08	12.44
	27	5.31	5.57	5.93	6.48	6.48	6.48	6.48	6.49	6.49	6.25
	30	4.93	5.07	5.35	5.76	5.74	5.70	5.65	5.58	5.37	5.09
	35	4.37	4.52	4.73	5.02	4.97	4.89	4.78	4.63	4.38	4.38
	40	3.68	3.76	3.86	4.01	3.94	3.86	3.74	3.56	3.41	3.41
	43	3.33	3.37	3.43	3.52	3.45	3.36	3.23	3.05	3.05	3.05

* Cooling capacity and power input at 100% load are shown at maximum compressor operating frequency.
* Power input does not include water pump power.
* Cooling capacity and power input at 100% load are measured in accordance with EN14511.

TO : Outdoor temperature (DB°C)
LWT : Leaving water temperature (°C)

Specifications Low noise operation

Outdoor unit HWT-401HW-E

Capacity (kW)		LWT (℃)		
		7	13	18
TO (℃)	20	4.12	4.86	5.34
	27	3.54	4.23	4.85
	30	3.29	3.95	4.65
	35	2.87	3.50	4.30
	40	2.16	2.90	3.32

Power input (kW)		LWT (℃)		
		7	13	18
TO (℃)	20	0.78	0.79	0.80
	27	0.92	0.94	0.98
	30	0.98	1.01	1.05
	35	1.08	1.12	1.18
	40	1.16	1.21	1.14

COP		LWT (℃)		
		7	13	18
TO (℃)	20	5.28	6.15	6.68
	27	3.84	4.48	4.97
	30	3.35	3.91	4.41
	35	2.66	3.13	3.64
	40	1.87	2.39	2.90

* Power input does not include water pump power.
* Cooling capacity and power input are measured in accordance with EN14511.

TO : Outdoor temperature (DB°C)
LWT : Leaving water temperature (°C)

Specifications part load heating capacity and input (Peak)LWT (°C) =35°C

Outdoor unit HWT-601HW-E

Capacity (kW)		Load (%)									
		100	90	80	70	60	50	40	30	20	10
TO (°C)	-20	4.03	3.62	3.21	2.81	2.40	1.99	1.58	1.17	0.98	0.98
	-15	4.75	4.28	3.80	3.33	2.86	2.38	1.91	1.17	1.17	1.17
	-10	5.57	4.99	4.42	3.84	3.27	2.69	2.07	1.45	1.45	1.45
	-7	6.06	5.42	4.79	4.15	3.52	2.88	2.59	1.61	1.61	1.61
	-2	5.70	5.58	4.90	4.22	3.54	2.91	2.43	1.64	1.50	1.50
	2	6.42	5.71	4.99	4.28	3.56	2.93	2.30	1.67	1.04	1.04
	7	7.25	6.47	5.69	4.90	4.12	3.46	2.79	2.13	1.46	0.80
	10	7.95	7.08	6.20	5.33	4.46	3.74	3.03	2.31	1.60	0.88
	12	8.42	7.49	6.55	5.62	4.68	3.93	3.18	2.44	1.69	0.94
	15	8.63	7.70	6.77	5.84	4.91	4.13	3.36	2.58	1.80	1.03
	20	8.98	8.06	7.14	6.21	5.29	4.47	3.64	2.82	1.99	1.17

Power input (kW)		Load (%)									
		100	90	80	70	60	50	40	30	20	10
TO (°C)	-20	1.73	1.57	1.40	1.24	1.08	0.91	0.75	0.59	0.52	0.52
	-15	1.79	1.62	1.45	1.29	1.12	0.95	0.78	0.55	0.55	0.55
	-10	1.89	1.72	1.55	1.37	1.18	0.99	0.78	0.56	0.56	0.56
	-7	1.95	1.76	1.57	1.38	1.20	1.01	0.82	0.57	0.57	0.57
	-2	1.51	1.53	1.35	1.17	0.99	0.83	0.68	0.49	0.48	0.48
	2	1.52	1.35	1.17	1.00	0.82	0.69	0.56	0.43	0.30	0.30
	7	1.49	1.31	1.13	0.95	0.77	0.65	0.54	0.42	0.30	0.23
	10	1.48	1.30	1.12	0.94	0.76	0.65	0.54	0.43	0.31	0.22
	12	1.48	1.30	1.12	0.94	0.76	0.65	0.54	0.43	0.32	0.21
	15	1.48	1.30	1.12	0.93	0.75	0.64	0.53	0.42	0.31	0.20
	20	1.48	1.30	1.11	0.93	0.74	0.63	0.52	0.41	0.30	0.19

COP		Load (%)									
		100	90	80	70	60	50	40	30	20	10
TO (°C)	-20	2.33	2.31	2.29	2.26	2.23	2.18	2.11	2.00	1.88	1.88
	-15	2.65	2.64	2.62	2.59	2.56	2.51	2.45	2.13	2.13	2.13
	-10	2.94	2.90	2.86	2.81	2.77	2.73	2.65	2.56	2.56	2.56
	-7	3.12	3.09	3.05	3.00	2.94	2.86	3.16	2.82	2.82	2.82
	-2	3.78	3.65	3.64	3.62	3.59	3.50	3.60	3.34	3.14	3.14
	2	4.22	4.24	4.26	4.30	4.34	4.25	4.11	3.88	3.47	3.47
	7	4.87	4.94	5.03	5.16	5.35	5.30	5.22	5.10	4.88	3.48
	10	5.36	5.43	5.52	5.65	5.83	5.75	5.63	5.44	5.12	4.06
	12	5.69	5.76	5.85	5.97	6.16	6.05	5.90	5.67	5.28	4.48
	15	5.83	5.93	6.06	6.25	6.52	6.43	6.30	6.10	5.77	5.07
	20	6.07	6.22	6.43	6.72	7.15	7.09	7.00	6.87	6.65	6.16

* Heating capacity and power input are maximum (peak) value during operation.
* Heating capacity and power input at 100% load are shown at maximum compressor operating frequency.
* Power input does not include water pump power.
* Heating capacity and power input are measured in accordance with EN14511.

TO : Outdoor temperature (DB°C)
LWT : Leaving water temperature (°C)

Specifications part load heating capacity and input (Peak)LWT (°C) =45°C

Outdoor unit HWT-601HW-E

Capacity (kW)		Load (%)									
		100	90	80	70	60	50	40	30	20	10
TO (°C)	-20	—	—	—	—	—	—	—	—	—	—
	-15	4.03	3.65	3.27	2.89	2.51	2.13	1.75	1.05	1.05	1.05
	-10	5.14	4.64	4.14	3.65	3.15	2.65	1.97	1.29	1.29	1.29
	-7	5.80	5.23	4.67	4.10	3.53	2.97	2.40	1.44	1.44	1.44
	-2	5.32	5.28	4.66	4.04	3.42	2.68	2.44	1.77	1.77	1.77
	2	5.99	5.33	4.66	4.00	3.33	2.90	2.46	2.03	2.03	2.03
	7	6.97	6.18	5.39	4.60	3.81	3.13	2.44	2.44	2.44	2.44
	10	7.64	6.78	5.93	5.07	4.21	3.45	2.69	2.69	2.69	2.69
	12	8.09	7.19	6.29	5.38	4.48	3.67	2.86	2.86	2.86	2.86
	15	8.31	7.41	6.51	5.61	4.72	3.85	2.98	2.98	2.98	2.98
	20	8.67	7.78	6.89	6.00	5.11	4.14	3.17	3.17	3.17	3.17

Power input (kW)		Load (%)									
		100	90	80	70	60	50	40	30	20	10
TO (°C)	-20	—	—	—	—	—	—	—	—	—	—
	-15	1.84	1.68	1.53	1.37	1.21	1.06	0.90	0.64	0.64	0.64
	-10	2.11	1.92	1.73	1.54	1.34	1.14	0.93	0.67	0.67	0.67
	-7	2.25	2.04	1.82	1.61	1.40	1.18	0.97	0.69	0.69	0.69
	-2	1.79	1.81	1.60	1.39	1.18	1.02	0.87	0.68	0.67	0.67
	2	1.83	1.63	1.42	1.22	1.01	0.90	0.78	0.67	0.67	0.67
	7	1.82	1.61	1.40	1.19	0.98	0.83	0.68	0.68	0.68	0.68
	10	1.83	1.62	1.41	1.19	0.98	0.82	0.67	0.67	0.67	0.67
	12	1.84	1.63	1.41	1.20	0.98	0.82	0.66	0.66	0.66	0.66
	15	1.84	1.63	1.41	1.19	0.98	0.82	0.66	0.66	0.66	0.66
	20	1.85	1.63	1.41	1.19	0.97	0.81	0.65	0.65	0.65	0.65

COP		Load (%)									
		100	90	80	70	60	50	40	30	20	10
TO (°C)	-20	—	—	—	—	—	—	—	—	—	—
	-15	2.19	2.17	2.14	2.11	2.07	2.02	1.94	1.64	1.64	1.64
	-10	2.43	2.41	2.39	2.37	2.34	2.32	2.12	1.92	1.92	1.92
	-7	2.58	2.57	2.56	2.55	2.53	2.51	2.47	2.09	2.09	2.09
	-2	2.98	2.92	2.92	2.91	2.89	2.61	2.81	2.60	2.64	2.64
	2	3.27	3.28	3.28	3.29	3.30	3.23	3.14	3.03	3.03	3.03
	7	3.83	3.84	3.85	3.87	3.89	3.77	3.59	3.59	3.59	3.59
	10	4.17	4.19	4.22	4.25	4.30	4.19	4.03	4.03	4.03	4.03
	12	4.40	4.42	4.46	4.50	4.57	4.48	4.33	4.33	4.33	4.33
	15	4.51	4.55	4.62	4.71	4.83	4.71	4.54	4.54	4.54	4.54
	20	4.69	4.77	4.89	5.04	5.27	5.11	4.88	4.88	4.88	4.88

* Heating capacity and power input are maximum (peak) value during operation.
* Heating capacity and power input at 100% load are shown at maximum compressor operating frequency.
* Power input does not include water pump power.
* Heating capacity and power input are measured in accordance with EN14511.

TO : Outdoor temperature (DB°C)
LWT : Leaving water temperature (°C)

Specifications part load heating capacity and input (Peak)LWT (°C) =55°C

Outdoor unit HWT-601HW-E

Capacity (kW)		Load (%)									
		100	90	80	70	60	50	40	30	20	10
TO (°C)	-20	—	—	—	—	—	—	—	—	—	—
	-15	—	—	—	—	—	—	—	—	—	—
	-10	—	—	—	—	—	—	—	—	—	—
	-7	5.42	4.92	4.41	3.91	3.40	3.40	3.40	3.40	3.40	3.40
	-2	5.80	5.22	4.65	4.07	3.50	3.15	2.92	2.92	2.92	2.92
	2	6.10	5.47	4.84	4.21	3.58	2.95	2.54	2.54	2.54	2.54
	7	7.53	6.74	5.94	5.15	4.35	3.56	2.89	2.22	2.22	2.22
	10	8.00	7.19	6.38	5.58	4.77	3.96	3.22	2.48	2.48	2.48
	12	8.31	7.49	6.68	5.86	5.05	4.23	3.44	2.65	2.65	2.65
	15	8.22	7.39	6.56	5.73	4.90	4.09	3.29	2.80	2.80	2.80
	20	8.06	7.21	6.36	5.51	4.66	3.85	3.04	3.04	3.04	3.04

Power input (kW)		Load (%)									
		100	90	80	70	60	50	40	30	20	10
TO (°C)	-20	—	—	—	—	—	—	—	—	—	—
	-15	—	—	—	—	—	—	—	—	—	—
	-10	—	—	—	—	—	—	—	—	—	—
	-7	2.66	2.42	2.19	1.95	1.71	1.71	1.71	1.71	1.71	1.71
	-2	2.58	2.33	2.08	1.83	1.57	1.43	1.36	1.36	1.36	1.36
	2	2.52	2.26	1.99	1.73	1.46	1.20	1.08	1.08	1.08	1.08
	7	2.61	2.33	2.04	1.76	1.47	1.19	1.02	0.84	0.84	0.84
	10	2.60	2.32	2.03	1.75	1.47	1.19	1.01	0.83	0.83	0.83
	12	2.59	2.31	2.03	1.75	1.47	1.19	1.01	0.83	0.83	0.83
	15	2.44	2.17	1.90	1.64	1.37	1.13	0.94	0.83	0.83	0.83
	20	2.18	1.94	1.70	1.45	1.21	1.02	0.83	0.83	0.83	0.83

COP		Load (%)									
		100	90	80	70	60	50	40	30	20	10
TO (°C)	-20	—	—	—	—	—	—	—	—	—	—
	-15	—	—	—	—	—	—	—	—	—	—
	-10	—	—	—	—	—	—	—	—	—	—
	-7	2.04	2.03	2.02	2.01	1.99	1.99	1.99	1.99	1.99	1.99
	-2	2.25	2.24	2.24	2.23	2.22	2.21	2.15	2.15	2.15	2.15
	2	2.42	2.42	2.43	2.44	2.45	2.46	2.35	2.35	2.35	2.35
	7	2.89	2.90	2.91	2.93	2.95	2.99	2.85	2.64	2.64	2.64
	10	3.08	3.10	3.14	3.18	3.24	3.33	3.18	2.97	2.97	2.97
	12	3.21	3.24	3.29	3.35	3.43	3.55	3.41	3.19	3.19	3.19
	15	3.37	3.40	3.44	3.50	3.57	3.63	3.49	3.37	3.37	3.37
	20	3.70	3.72	3.75	3.79	3.85	3.77	3.66	3.66	3.66	3.66

* Heating capacity and power input are maximum (peak) value during operation.
* Heating capacity and power input at 100% load are shown at maximum compressor operating frequency.
* Power input does not include water pump power.
* Heating capacity and power input are measured in accordance with EN14511.

TO : Outdoor temperature (DB°C)
LWT : Leaving water temperature (°C)

Specifications Low noise operation

Outdoor unit HWT-601HW-E

Capacity (kW)		LWT (°C)		
		35	45	55
TO (°C)	-20	1.93	—	—
	-15	2.08	1.92	—
	-10	2.46	2.27	—
	-7	2.69	2.48	2.04
	-2	3.18	2.97	2.56
	2	3.58	3.36	2.97
	7	4.29	4.12	3.61
	10	4.54	4.38	3.74
	12	4.71	4.55	3.82
	15	4.86	4.71	4.13
	20	5.11	4.98	4.65

Power input (kW)		LWT (°C)		
		35	45	55
TO (°C)	-20	0.83	—	—
	-15	0.86	1.00	—
	-10	0.89	1.05	—
	-7	0.90	1.07	1.23
	-2	0.91	1.10	1.29
	2	0.91	1.12	1.33
	7	0.92	1.15	1.39
	10	0.91	1.15	1.40
	12	0.91	1.15	1.41
	15	0.91	1.15	1.42
	20	0.91	1.16	1.44

COP		LWT (°C)		
		35	45	55
TO (°C)	-20	2.33	—	—
	-15	2.42	1.92	—
	-10	2.78	2.17	—
	-7	2.99	2.32	1.66
	-2	3.52	2.70	1.99
	2	3.93	3.00	2.23
	7	4.66	3.58	2.60
	10	4.97	3.81	2.66
	12	5.18	3.96	2.71
	15	5.34	4.08	2.91
	20	5.62	4.29	3.23

* Power input does not include water pump power.
* Heating capacity and power input at 100% load are measured in accordance with EN14511.

TO : Outdoor temperature (DB°C)
LWT : Leaving water temperature (°C)

Specifications part load cooling capacity and input LWT (°C) =7°C

Outdoor unit HWT-601HW-E

Capacity (kW)		Load (%)									
		100	90	80	70	60	50	40	30	20	10
TO (°C)	20	5.72	5.09	4.46	3.83	3.24	2.65	2.07	1.48	0.89	0.89
	27	5.54	4.94	4.34	3.74	3.17	2.61	2.06	1.51	0.96	0.96
	30	5.37	4.79	4.22	3.65	3.09	2.56	2.03	1.51	0.99	0.99
	35	5.33	4.77	4.21	3.64	3.08	2.57	2.06	1.55	1.04	1.04
	40	4.81	4.31	3.82	3.32	2.83	2.36	1.94	1.51	1.09	1.09
	43	4.49	4.04	3.59	3.13	2.68	2.23	1.86	1.49	1.12	1.12

Power input (kW)		Load (%)									
		100	90	80	70	60	50	40	30	20	10
TO (°C)	20	1.12	0.95	0.79	0.62	0.53	0.43	0.34	0.24	0.15	0.15
	27	1.40	1.21	1.03	0.84	0.69	0.59	0.48	0.37	0.27	0.27
	30	1.51	1.32	1.13	0.94	0.78	0.67	0.55	0.44	0.33	0.33
	35	1.72	1.51	1.30	1.09	0.88	0.76	0.64	0.52	0.40	0.40
	40	1.86	1.67	1.48	1.28	1.09	0.94	0.80	0.66	0.53	0.53
	43	1.94	1.76	1.58	1.40	1.22	1.04	0.89	0.75	0.60	0.60

COP		Load (%)									
		100	90	80	70	60	50	40	30	20	10
TO (°C)	20	5.11	5.34	5.67	6.18	6.16	6.14	6.11	6.06	5.93	5.93
	27	3.96	4.07	4.23	4.46	4.58	4.47	4.31	4.05	3.60	3.60
	30	3.57	3.64	3.74	3.87	3.94	3.84	3.68	3.44	3.03	3.03
	35	3.10	3.16	3.23	3.34	3.50	3.38	3.22	2.98	2.60	2.60
	40	2.59	2.59	2.59	2.59	2.59	2.52	2.42	2.29	2.08	2.08
	43	2.31	2.29	2.27	2.24	2.20	2.14	2.08	2.00	1.87	1.87

* Cooling capacity and power input at 100% load are shown at maximum compressor operating frequency.
* Power input does not include water pump power.
* Cooling capacity and power input at 100% load are measured in accordance with EN14511.

TO : Outdoor temperature (DB°C)
LWT : Leaving water temperature (°C)

Specifications part load cooling capacity and input LWT (°C) =13°C

Outdoor unit HWT-601HW-E

Capacity (kW)		Load (%)									
		100	90	80	70	60	50	40	30	20	10
TO (°C)	20	6.63	5.92	5.21	4.50	3.91	3.31	2.72	2.13	1.53	0.94
	27	6.57	5.86	5.15	4.44	3.80	3.21	2.62	2.03	1.45	1.13
	30	6.45	5.77	5.08	4.40	3.77	3.19	2.60	2.02	1.43	1.19
	35	6.51	5.80	5.09	4.38	3.67	3.09	2.51	1.93	1.35	1.35
	40	6.04	5.44	4.85	4.26	3.67	3.13	2.54	1.96	1.37	1.37
	43	5.75	5.23	4.71	4.19	3.67	3.15	2.56	1.97	1.38	1.38

Power input (kW)		Load (%)									
		100	90	80	70	60	50	40	30	20	10
TO (°C)	20	1.21	1.01	0.81	0.61	0.53	0.44	0.36	0.27	0.19	0.10
	27	1.48	1.26	1.05	0.84	0.69	0.58	0.48	0.38	0.27	0.23
	30	1.59	1.37	1.16	0.95	0.79	0.67	0.55	0.44	0.32	0.29
	35	1.78	1.55	1.33	1.10	0.87	0.75	0.62	0.50	0.37	0.37
	40	1.94	1.73	1.53	1.32	1.12	0.95	0.80	0.65	0.50	0.50
	43	2.03	1.84	1.65	1.45	1.26	1.07	0.91	0.74	0.58	0.58

COP		Load (%)									
		100	90	80	70	60	50	40	30	20	10
TO (°C)	20	5.48	5.86	6.43	7.38	7.44	7.53	7.66	7.88	8.29	9.40
	27	4.45	4.64	4.91	5.31	5.53	5.51	5.48	5.43	5.34	5.01
	30	4.06	4.21	4.38	4.64	4.80	4.78	4.71	4.60	4.41	4.10
	35	3.66	3.74	3.84	3.99	4.22	4.15	4.05	3.90	3.65	3.65
	40	3.12	3.14	3.18	3.23	3.29	3.30	3.18	3.01	2.73	2.73
	43	2.83	2.85	2.86	2.88	2.91	2.94	2.82	2.65	2.38	2.38

* Cooling capacity and power input at 100% load are shown at maximum compressor operating frequency.
* Power input does not include water pump power.
* Cooling capacity and power input at 100% load are measured in accordance with EN14511.

TO : Outdoor temperature (DB°C)
LWT : Leaving water temperature (°C)

Specifications part load cooling capacity and input LWT (°C) =18°C

Outdoor unit HWT-601HW-E

Capacity (kW)		Load (%)									
		100	90	80	70	60	50	40	30	20	10
TO (°C)	20	7.51	6.67	5.82	4.98	4.34	3.69	3.05	2.41	1.76	1.12
	27	7.33	6.55	5.78	5.00	4.33	3.66	2.98	2.31	1.64	1.29
	30	7.25	6.41	5.66	4.91	4.24	3.57	2.89	2.21	1.63	1.37
	35	7.12	6.42	5.72	5.02	4.32	3.61	2.91	2.20	1.49	1.49
	40	6.60	5.94	5.28	4.61	3.95	3.27	2.58	1.89	1.63	1.63
	43	6.29	5.65	5.01	4.37	3.73	3.06	2.38	1.71	1.71	1.71

Power input (kW)		Load (%)									
		100	90	80	70	60	50	40	30	20	10
TO (°C)	20	1.23	1.02	0.81	0.60	0.52	0.43	0.35	0.26	0.18	0.09
	27	1.51	1.28	1.06	0.83	0.68	0.57	0.46	0.36	0.25	0.21
	30	1.62	1.38	1.15	0.93	0.75	0.63	0.51	0.40	0.30	0.27
	35	1.82	1.58	1.34	1.10	0.86	0.73	0.60	0.47	0.34	0.34
	40	1.97	1.72	1.48	1.23	0.99	0.83	0.68	0.53	0.48	0.48
	43	2.06	1.81	1.56	1.31	1.06	0.89	0.73	0.56	0.56	0.56

COP		Load (%)									
		100	90	80	70	60	50	40	30	20	10
TO (°C)	20	6.11	6.54	7.19	8.30	8.42	8.59	8.84	9.26	10.08	12.44
	27	4.87	5.11	5.46	6.00	6.40	6.41	6.43	6.45	6.49	6.25
	30	4.47	4.63	4.90	5.31	5.68	5.66	5.62	5.58	5.37	5.09
	35	3.91	4.06	4.27	4.56	5.02	4.95	4.84	4.68	4.38	4.38
	40	3.35	3.45	3.57	3.75	4.01	3.92	3.80	3.60	3.41	3.41
	43	3.05	3.12	3.21	3.34	3.52	3.42	3.28	3.05	3.05	3.05

* Cooling capacity and power input at 100% load are shown at maximum compressor operating frequency.
* Power input does not include water pump power.
* Cooling capacity and power input at 100% load are measured in accordance with EN14511.

TO : Outdoor temperature (DB°C)
LWT : Leaving water temperature (°C)

Specifications Low noise operation

Outdoor unit HWT-601HW-E

Capacity (kW)		LWT (°C)		
		7	13	18
TO (°C)	20	4.12	4.86	5.34
	27	3.54	4.23	4.85
	30	3.29	3.95	4.65
	35	2.87	3.50	4.30
	40	2.16	2.90	3.32

Power input (kW)		LWT (°C)		
		7	13	18
TO (°C)	20	0.78	0.79	0.80
	27	0.92	0.94	0.98
	30	0.98	1.01	1.05
	35	1.08	1.12	1.18
	40	1.16	1.21	1.14

COP		LWT (°C)		
		7	13	18
TO (°C)	20	5.28	6.15	6.68
	27	3.84	4.48	4.97
	30	3.35	3.91	4.41
	35	2.66	3.13	3.64
	40	1.87	2.39	2.90

* Power input does not include water pump power.
* Cooling capacity and power input are measured in accordance with EN14511.

TO : Outdoor temperature (DB°C)
LWT : Leaving water temperature (°C)

Specifications part load heating capacity and input (peak)LWT (°C) =35°C

Outdoor unit HWT-801H(R)W-E

Capacity (kW)		Load (%)									
		100	90	80	70	60	50	40	30	20	10
TO (°C)	-25	4.43	3.99	3.54	3.10	2.65	2.21	1.76	1.76	1.76	1.76
	-20	5.45	4.87	4.29	3.72	3.14	2.56	2.34	2.34	2.34	2.34
	-15	6.46	5.75	5.04	4.34	3.63	2.92	2.92	2.92	2.92	2.92
	-10	7.49	6.69	5.89	5.08	4.28	3.48	3.07	2.67	2.67	2.67
	-7	8.11	7.25	6.39	5.53	4.67	3.81	3.17	2.52	2.52	2.52
	-2	9.24	8.29	7.34	6.38	5.43	4.48	3.53	2.58	2.58	2.58
	2	10.30	9.20	8.11	7.01	5.91	4.81	3.72	2.62	2.62	2.62
	7	11.90	10.69	9.48	8.27	7.06	5.85	4.64	3.43	2.22	1.01
	10	12.57	11.61	10.36	9.10	7.85	6.59	5.24	3.88	2.53	1.17
	12	13.01	11.76	10.51	9.25	8.00	6.75	5.38	4.02	2.65	1.28
	15	13.22	11.97	10.73	9.48	8.23	6.99	5.60	4.22	2.83	1.45
	20	13.57	12.33	11.09	9.86	8.62	7.38	5.97	4.55	3.14	1.72

Power input (kW)		Load (%)									
		100	90	80	70	60	50	40	30	20	10
TO (°C)	-25	2.22	2.03	1.84	1.65	1.45	1.26	1.07	1.07	1.07	1.07
	-20	2.41	2.17	1.93	1.68	1.44	1.20	1.11	1.11	1.11	1.11
	-15	2.60	2.31	2.02	1.72	1.43	1.14	1.14	1.14	1.14	1.14
	-10	2.78	2.45	2.13	1.80	1.48	1.15	1.04	0.92	0.92	0.92
	-7	2.88	2.54	2.19	1.85	1.50	1.16	0.98	0.79	0.79	0.79
	-2	2.71	2.42	2.14	1.85	1.57	1.28	0.99	0.71	0.71	0.71
	2	2.77	2.47	2.16	1.86	1.55	1.25	0.94	0.64	0.64	0.64
	7	2.62	2.36	2.10	1.85	1.59	1.33	1.07	0.82	0.56	0.30
	10	2.63	2.33	2.03	1.73	1.43	1.13	0.92	0.71	0.50	0.29
	12	2.63	2.33	2.02	1.72	1.41	1.11	0.90	0.70	0.49	0.28
	15	2.63	2.32	2.01	1.70	1.39	1.08	0.88	0.68	0.47	0.27
	20	2.62	2.30	1.99	1.67	1.36	1.04	0.84	0.65	0.45	0.25

COP		Load (%)									
		100	90	80	70	60	50	40	30	20	10
TO (°C)	-25	2.00	1.96	1.93	1.88	1.82	1.75	1.64	1.64	1.64	1.64
	-20	2.26	2.25	2.23	2.21	2.18	2.13	2.12	2.12	2.12	2.12
	-15	2.48	2.49	2.50	2.52	2.53	2.56	2.56	2.56	2.56	2.56
	-10	2.70	2.73	2.77	2.82	2.90	3.02	2.96	2.90	2.90	2.90
	-7	2.82	2.86	2.92	2.99	3.11	3.28	3.25	3.19	3.19	3.19
	-2	3.41	3.42	3.43	3.45	3.47	3.50	3.55	3.64	3.64	3.64
	2	3.72	3.73	3.75	3.77	3.81	3.86	3.94	4.09	4.09	4.09
	7	4.54	4.53	4.50	4.48	4.44	4.39	4.32	4.20	3.97	3.35
	10	4.77	4.98	5.10	5.26	5.49	5.85	5.71	5.49	5.08	4.07
	12	4.95	5.06	5.20	5.39	5.66	6.08	5.96	5.78	5.43	4.57
	15	5.03	5.17	5.34	5.57	5.91	6.45	6.36	6.23	5.99	5.38
	20	5.18	5.35	5.58	5.89	6.36	7.10	7.08	7.05	7.01	6.88

* Heating capacity and power input are maximum (peak) value during operation.
* Heating capacity and power input at 100% load are shown at maximum compressor operating frequency.
* Power input does not include water pump power.
* Heating capacity and power input are measured in accordance with EN14511.

TO : Outdoor temperature (DB°C)
LWT : Leaving water temperature (°C)

Specifications part load heating capacity and input (peak)LWT (°C) =45°C

Outdoor unit HWT-801H(R)W-E

Capacity (kW)		Load (%)									
		100	90	80	70	60	50	40	30	20	10
TO (°C)	-25	4.55	4.09	3.63	3.18	2.72	2.26	1.80	1.80	1.80	1.80
	-20	5.27	5.00	4.46	3.92	3.37	2.83	2.29	2.29	2.29	2.29
	-15	6.54	5.91	5.28	4.66	4.03	3.40	2.77	2.77	2.77	2.77
	-10	7.45	6.67	5.89	5.11	4.33	3.55	2.90	2.50	2.50	2.50
	-7	8.00	7.13	6.26	5.38	4.51	3.64	2.99	2.33	2.33	2.33
	-2	9.15	8.20	7.24	6.29	5.34	4.38	3.43	2.48	2.48	2.48
	2	10.26	9.20	8.14	7.08	6.02	4.96	3.58	2.60	2.60	2.60
	7	11.75	10.48	9.22	7.95	6.68	5.41	4.15	2.88	2.88	2.88
	10	12.36	11.44	10.17	8.90	7.63	6.37	4.73	3.10	3.10	3.10
	12	12.77	11.52	10.27	9.01	7.76	6.51	4.88	3.24	3.24	3.24
	15	12.87	11.64	10.41	9.18	7.96	6.73	5.09	3.46	3.46	3.46
	20	13.03	11.84	10.65	9.47	8.28	7.09	5.46	3.82	3.82	3.82

Power input (kW)		Load (%)									
		100	90	80	70	60	50	40	30	20	10
TO (°C)	-25	2.68	2.43	2.18	1.93	1.68	1.43	1.18	1.18	1.18	1.18
	-20	2.83	2.66	2.38	2.10	1.82	1.54	1.26	1.26	1.26	1.26
	-15	3.21	2.90	2.59	2.28	1.96	1.65	1.34	1.34	1.34	1.34
	-10	3.31	2.95	2.58	2.22	1.86	1.49	1.25	1.12	1.12	1.12
	-7	3.37	2.98	2.58	2.19	1.79	1.40	1.19	0.98	0.98	0.98
	-2	3.26	2.93	2.59	2.26	1.93	1.59	1.26	0.92	0.92	0.92
	2	3.38	2.99	2.61	2.22	1.84	1.45	1.20	0.88	0.88	0.88
	7	3.39	3.02	2.65	2.27	1.90	1.53	1.16	0.79	0.79	0.79
	10	3.38	2.97	2.58	2.18	1.79	1.40	1.09	0.77	0.77	0.77
	12	3.37	2.98	2.58	2.19	1.79	1.40	1.08	0.76	0.76	0.76
	15	3.39	2.99	2.59	2.19	1.79	1.40	1.07	0.75	0.75	0.75
	20	3.42	3.01	2.61	2.20	1.80	1.39	1.06	0.72	0.72	0.72

COP		Load (%)									
		100	90	80	70	60	50	40	30	20	10
TO (°C)	-25	1.70	1.68	1.67	1.65	1.62	1.58	1.53	1.53	1.53	1.53
	-20	1.86	1.88	1.87	1.86	1.85	1.84	1.81	1.81	1.81	1.81
	-15	2.04	2.04	2.04	2.05	2.05	2.06	2.07	2.07	2.07	2.07
	-10	2.25	2.26	2.28	2.30	2.33	2.38	2.33	2.24	2.24	2.24
	-7	2.37	2.40	2.42	2.46	2.52	2.60	2.51	2.38	2.38	2.38
	-2	2.81	2.80	2.79	2.78	2.77	2.75	2.73	2.68	2.68	2.68
	2	3.04	3.07	3.12	3.19	3.28	3.42	2.99	2.95	2.95	2.95
	7	3.47	3.47	3.48	3.50	3.51	3.54	3.58	3.67	3.67	3.67
	10	3.66	3.86	3.95	4.07	4.26	4.54	4.35	4.02	4.02	4.02
	12	3.79	3.87	3.98	4.12	4.33	4.65	4.51	4.26	4.26	4.26
	15	3.80	3.89	4.02	4.19	4.43	4.82	4.76	4.64	4.64	4.64
	20	3.81	3.93	4.09	4.30	4.61	5.10	5.17	5.31	5.31	5.31

* Heating capacity and power input are maximum (peak) value during operation.
* Heating capacity and power input at 100% load are shown at maximum compressor operating frequency.
* Power input does not include water pump power.
* Heating capacity and power input are measured in accordance with EN14511.

TO : Outdoor temperature (DB°C)
LWT : Leaving water temperature (°C)

Specifications part load heating capacity and input (peak)LWT (°C) =55°C

Outdoor unit HWT-801H(R)W-E

Capacity (kW)		Load (%)									
		100	90	80	70	60	50	40	30	20	10
TO (°C)	-25	4.67	4.19	3.70	3.22	2.73	2.25	1.76	1.76	1.76	1.76
	-20	5.54	4.99	4.44	3.89	3.34	2.79	2.24	2.24	2.24	2.24
	-15	6.41	5.79	5.18	4.56	3.94	3.33	2.71	2.71	2.71	2.71
	-10	7.00	6.29	5.58	4.86	4.15	3.44	2.82	2.35	2.35	2.35
	-7	7.35	6.58	5.81	5.05	4.28	3.51	2.88	2.14	2.14	2.14
	-2	8.79	7.89	6.99	6.08	5.18	4.28	3.38	2.47	2.47	2.47
	2	9.50	8.53	7.56	6.59	5.62	4.65	3.71	2.74	2.74	2.74
	7	9.96	8.95	7.94	6.93	5.91	4.90	3.89	2.88	2.88	2.88
	10	10.76	9.59	8.42	7.26	6.09	5.05	4.01	2.96	2.96	2.96
	12	11.29	10.02	8.75	7.48	6.21	5.15	4.08	3.02	3.02	3.02
	15	11.36	10.13	8.91	7.68	6.46	5.39	4.31	3.24	3.24	3.24
	20	11.47	10.32	9.17	8.02	6.87	5.78	4.70	3.61	3.61	3.61

Power input (kW)		Load (%)									
		100	90	80	70	60	50	40	30	20	10
TO (°C)	-25	3.27	2.96	2.64	2.33	2.01	1.70	1.38	1.38	1.38	1.38
	-20	3.36	3.04	2.73	2.42	2.11	1.80	1.49	1.49	1.49	1.49
	-15	3.44	3.13	2.82	2.52	2.21	1.90	1.59	1.59	1.59	1.59
	-10	3.54	3.18	2.83	2.47	2.11	1.76	1.54	1.33	1.33	1.33
	-7	3.60	3.21	2.83	2.44	2.06	1.67	1.52	1.17	1.17	1.17
	-2	3.65	3.30	2.95	2.60	2.25	1.90	1.55	1.20	1.20	1.20
	2	3.56	3.19	2.83	2.46	2.10	1.73	1.56	1.23	1.23	1.23
	7	3.47	3.14	2.80	2.47	2.13	1.80	1.46	1.13	1.13	1.13
	10	3.47	3.08	2.68	2.29	1.89	1.61	1.34	1.06	1.06	1.06
	12	3.47	3.04	2.60	2.17	1.73	1.49	1.26	1.02	1.02	1.02
	15	3.46	3.03	2.60	2.17	1.73	1.49	1.25	1.01	1.01	1.01
	20	3.44	3.02	2.59	2.17	1.74	1.49	1.24	0.99	0.99	0.99

COP		Load (%)									
		100	90	80	70	60	50	40	30	20	10
TO (°C)	-25	1.43	1.42	1.40	1.38	1.36	1.32	1.28	1.28	1.28	1.28
	-20	1.65	1.64	1.62	1.61	1.58	1.55	1.51	1.51	1.51	1.51
	-15	1.86	1.85	1.83	1.81	1.79	1.75	1.70	1.70	1.70	1.70
	-10	1.98	1.97	1.97	1.97	1.97	1.96	1.83	1.77	1.77	1.77
	-7	2.04	2.05	2.06	2.07	2.08	2.10	1.90	1.83	1.83	1.83
	-2	2.41	2.39	2.37	2.34	2.30	2.25	2.17	2.06	2.06	2.06
	2	2.67	2.67	2.67	2.68	2.68	2.69	2.37	2.23	2.23	2.23
	7	2.87	2.85	2.83	2.81	2.78	2.73	2.67	2.56	2.56	2.56
	10	3.10	3.12	3.14	3.18	3.22	3.13	2.99	2.79	2.79	2.79
	12	3.25	3.30	3.37	3.45	3.59	3.45	3.25	2.96	2.96	2.96
	15	3.28	3.35	3.43	3.55	3.72	3.61	3.45	3.21	3.21	3.21
	20	3.33	3.42	3.54	3.70	3.95	3.88	3.79	3.65	3.65	3.65

* Heating capacity and power input are maximum (peak) value during operation.
* Heating capacity and power input at 100% load are shown at maximum compressor operating frequency.
* Power input does not include water pump power.
* Heating capacity and power input are measured in accordance with EN14511.

TO : Outdoor temperature (DB°C)
LWT : Leaving water temperature (°C)

Specifications Low noise operation

Outdoor unit HWT-801H(R)W-E

Capacity (kW)		LWT (°C)		
		35	45	55
TO (°C)	-25	2.58	2.37	2.39
	-20	3.12	2.92	2.91
	-15	3.65	3.46	3.43
	-10	3.75	3.51	3.45
	-7	3.81	3.54	3.46
	-2	4.55	4.26	4.02
	2	5.15	4.84	4.46
	7	5.93	5.62	5.36
	10	6.29	5.99	5.74
	12	6.54	6.24	5.99
	15	6.90	6.62	6.36
	20	7.51	7.24	6.99

Power input (kW)		LWT (°C)		
		35	45	55
TO (°C)	-25	1.37	1.59	1.91
	-20	1.44	1.66	1.98
	-15	1.51	1.73	2.05
	-10	1.36	1.58	1.89
	-7	1.28	1.50	1.79
	-2	1.20	1.44	1.77
	2	1.14	1.39	1.75
	7	1.10	1.42	1.72
	10	1.09	1.41	1.72
	12	1.08	1.40	1.73
	15	1.06	1.40	1.73
	20	1.04	1.38	1.74

COP		LWT (°C)		
		35	45	55
TO (°C)	-25	1.88	1.49	1.25
	-20	2.16	1.76	1.47
	-15	2.42	2.00	1.67
	-10	2.77	2.23	1.84
	-7	2.98	2.36	1.93
	-2	3.79	2.96	2.27
	2	4.52	3.48	2.55
	7	5.39	3.96	3.12
	10	5.80	4.25	3.33
	12	6.07	4.44	3.47
	15	6.49	4.74	3.67
	20	7.22	5.25	4.02

* Power input does not include water pump power.
* Heating capacity and power input at 100% load are measured in accordance with EN14511.

TO : Outdoor temperature (DB°C)
LWT : Leaving water temperature (°C)

Specifications part load cooling capacity and input LWT (°C) =7°C

Outdoor unit HWT-801H(R)W-E

Capacity (kW)		Load (%)									
		100	90	80	70	60	50	40	30	20	10
TO (°C)	20	7.79	6.99	6.19	5.39	4.59	3.78	2.98	2.18	1.38	1.38
	27	7.30	6.57	5.84	5.11	4.38	3.65	2.93	2.20	1.47	1.47
	30	7.08	6.39	5.69	4.99	4.30	3.60	2.90	2.20	1.51	1.51
	35	6.73	6.09	5.44	4.80	4.15	3.51	2.86	2.22	1.57	1.57
	40	5.54	5.00	4.47	3.93	3.39	2.86	2.32	2.08	1.84	1.84
	43	4.82	4.35	3.88	3.41	2.94	2.47	2.00	2.00	2.00	2.00

Power input (kW)		Load (%)									
		100	90	80	70	60	50	40	30	20	10
TO (°C)	20	1.71	1.53	1.34	1.16	0.98	0.79	0.61	0.42	0.24	0.24
	27	1.93	1.74	1.55	1.36	1.17	0.98	0.79	0.60	0.41	0.41
	30	2.03	1.84	1.64	1.45	1.26	1.06	0.87	0.67	0.48	0.48
	35	2.19	1.99	1.79	1.59	1.40	1.20	1.00	0.80	0.60	0.60
	40	2.40	2.16	1.92	1.68	1.44	1.20	0.96	0.88	0.81	0.81
	43	2.53	2.26	2.00	1.73	1.46	1.20	0.93	0.93	0.93	0.93

COP		Load (%)									
		100	90	80	70	60	50	40	30	20	10
TO (°C)	20	4.56	4.58	4.61	4.65	4.70	4.78	4.91	5.15	5.75	5.75
	27	3.77	3.77	3.76	3.75	3.74	3.73	3.71	3.67	3.60	3.60
	30	3.49	3.48	3.46	3.45	3.42	3.39	3.34	3.27	3.14	3.14
	35	3.07	3.06	3.03	3.01	2.97	2.93	2.87	2.77	2.62	2.62
	40	2.30	2.31	2.33	2.34	2.36	2.39	2.43	2.36	2.28	2.28
	43	1.91	1.92	1.94	1.97	2.01	2.06	2.15	2.15	2.15	2.15

* Cooling capacity and power input at 100% load are shown at maximum compressor operating frequency.
* Power input does not include water pump power.
* Cooling capacity and power input at 100% load are measured in accordance with EN14511.

TO : Outdoor temperature (DB°C)
LWT : Leaving water temperature (°C)

Specifications part load cooling capacity and input LWT (°C) =13°C

Outdoor unit HWT-801H(R)W-E

Capacity (kW)		Load (%)									
		100	90	80	70	60	50	40	30	20	10
TO (°C)	20	8.97	8.10	7.22	6.35	5.47	4.60	3.72	2.85	1.97	1.1
	27	8.49	7.64	6.79	5.94	5.09	4.24	3.39	2.54	2.08	1.61
	30	8.28	7.44	6.61	5.77	4.93	4.09	3.25	2.41	2.12	1.83
	35	7.94	7.12	6.30	5.48	4.65	3.83	3.01	2.19	2.19	2.19
	40	7.00	6.27	5.55	4.83	4.11	3.39	2.67	2.36	2.36	2.36
	43	6.43	5.77	5.11	4.45	3.78	3.12	2.46	2.46	2.46	2.46

Power input (kW)		Load (%)									
		100	90	80	70	60	50	40	30	20	10
TO (°C)	20	1.77	1.59	1.41	1.23	1.05	0.88	0.70	0.52	0.34	0.16
	27	1.99	1.79	1.58	1.37	1.16	0.95	0.75	0.54	0.44	0.35
	30	2.09	1.87	1.65	1.43	1.21	0.99	0.77	0.55	0.49	0.43
	35	2.25	2.01	1.77	1.53	1.28	1.04	0.80	0.56	0.56	0.56
	40	2.50	2.23	1.96	1.68	1.41	1.14	0.87	0.78	0.78	0.78
	43	2.65	2.36	2.07	1.78	1.49	1.20	0.91	0.91	0.91	0.91

COP		Load (%)									
		100	90	80	70	60	50	40	30	20	10
TO (°C)	20	5.07	5.09	5.11	5.15	5.19	5.25	5.34	5.50	5.83	6.88
	27	4.26	4.28	4.30	4.34	4.38	4.45	4.55	4.73	4.69	4.64
	30	3.96	3.98	4.01	4.04	4.08	4.14	4.24	4.41	4.36	4.28
	35	3.53	3.54	3.56	3.59	3.62	3.68	3.76	3.91	3.91	3.91
	40	2.80	2.82	2.84	2.87	2.91	2.97	3.07	3.03	3.03	3.03
	43	2.43	2.44	2.47	2.50	2.54	2.60	2.70	2.70	2.70	2.70

* Cooling capacity and power input at 100% load are shown at maximum compressor operating frequency.
* Power input does not include water pump power.
* Cooling capacity and power input at 100% load are measured in accordance with EN14511.

TO : Outdoor temperature (DB°C)
LWT : Leaving water temperature (°C)

Specifications part load cooling capacity and input LWT (°C) =18°C

Outdoor unit HWT-801H(R)W-E

Capacity (kW)		Load (%)									
		100	90	80	70	60	50	40	30	20	10
TO (°C)	20	10.09	9.02	7.95	6.88	5.81	4.74	3.67	2.60	1.53	1.53
	27	9.51	8.53	7.55	6.56	5.58	4.60	3.62	2.63	2.06	2.06
	30	9.26	8.32	7.37	6.43	5.48	4.54	3.59	2.65	2.29	2.29
	35	8.85	7.97	7.08	6.20	5.32	4.44	3.55	2.67	2.67	2.67
	40	8.04	7.23	6.43	5.62	4.81	4.00	3.19	2.86	2.86	2.86
	43	7.56	6.80	6.03	5.27	4.50	3.74	2.97	2.97	2.97	2.97

Power input (kW)		Load (%)									
		100	90	80	70	60	50	40	30	20	10
TO (°C)	20	1.71	1.51	1.31	1.11	0.92	0.72	0.52	0.32	0.12	0.12
	27	1.98	1.76	1.53	1.31	1.08	0.86	0.64	0.41	0.31	0.31
	30	2.10	1.86	1.63	1.39	1.16	0.92	0.69	0.45	0.39	0.39
	35	2.29	2.04	1.78	1.53	1.28	1.03	0.77	0.52	0.52	0.52
	40	2.54	2.26	1.97	1.69	1.41	1.12	0.84	0.75	0.75	0.75
	43	2.69	2.39	2.09	1.79	1.48	1.18	0.88	0.88	0.88	0.88

COP		Load (%)									
		100	90	80	70	60	50	40	30	20	10
TO (°C)	20	5.90	5.97	6.06	6.18	6.35	6.62	7.09	8.16	12.75	12.75
	27	4.80	4.86	4.92	5.02	5.15	5.34	5.68	6.38	6.72	6.72
	30	4.42	4.47	4.53	4.62	4.74	4.92	5.22	5.84	5.92	5.92
	35	3.86	3.91	3.97	4.05	4.16	4.32	4.60	5.13	5.13	5.13
	40	3.17	3.21	3.26	3.32	3.42	3.56	3.80	3.84	3.84	3.84
	43	2.81	2.85	2.89	2.95	3.03	3.16	3.38	3.38	3.38	3.38

* Cooling capacity and power input at 100% load are shown at maximum compressor operating frequency.
* Power input does not include water pump power.
* Cooling capacity and power input at 100% load are measured in accordance with EN14511.

TO : Outdoor temperature (DB°C)
LWT : Leaving water temperature (°C)

Specifications Low noise operation

Outdoor unit HWT-801H(R)W-E

Capacity (kW)		LWT (°C)		
		7	13	18
TO (°C)	20	5.70	6.47	7.12
	27	5.20	6.03	6.72
	30	4.98	5.83	6.55
	35	4.62	5.51	6.26
	40	3.99	4.90	5.67

Power input (kW)		LWT (°C)		
		7	13	18
TO (°C)	20	0.91	0.89	0.87
	27	1.12	1.11	1.10
	30	1.22	1.21	1.20
	35	1.37	1.36	1.36
	40	1.53	1.54	1.55

COP		LWT (°C)		
		7	13	18
TO (°C)	20	6.26	7.29	8.18
	27	4.62	5.43	6.12
	30	4.09	4.84	5.47
	35	3.37	4.04	4.60
	40	2.60	3.18	3.65

* Power input does not include water pump power.
* Cooling capacity and power input are measured in accordance with EN14511.

TO : Outdoor temperature (DB°C)
LWT : Leaving water temperature (°C)

Specifications part load heating capacity and input (peak)LWT (°C) =35°C

Outdoor unit HWT-1101H(R)W-E

Capacity (kW)		Load (%)									
		100	90	80	70	60	50	40	30	20	10
TO (°C)	-25	5.20	4.71	4.22	3.73	3.23	2.74	2.25	1.76	1.76	1.76
	-20	6.29	5.67	5.05	4.44	3.82	3.20	2.59	2.34	2.34	2.34
	-15	7.37	6.63	5.89	5.15	4.40	3.66	2.92	2.92	2.92	2.92
	-10	8.45	7.62	6.79	5.96	5.13	4.31	3.48	2.67	2.67	2.67
	-7	9.10	8.22	7.34	6.46	5.57	4.69	3.81	2.52	2.52	2.52
	-2	10.28	9.42	8.57	7.71	6.86	6.00	5.15	4.29	3.44	2.58
	2	11.46	10.36	9.25	8.15	7.05	5.94	4.84	3.73	2.63	2.63
	7	13.24	11.88	10.52	9.16	7.80	6.44	5.08	3.72	2.36	1.01
	10	13.86	12.62	11.11	9.61	8.10	6.59	5.20	3.86	2.51	1.17
	12	14.28	12.77	11.27	9.76	8.26	6.75	5.38	4.02	2.65	1.28
	15	14.51	13.01	11.50	10.00	8.49	6.99	5.66	4.25	2.85	1.45
	20	14.90	13.40	11.89	10.39	8.88	7.38	6.11	4.65	3.18	1.72

Power input (kW)		Load (%)									
		100	90	80	70	60	50	40	30	20	10
TO (°C)	-25	2.60	2.38	2.16	1.94	1.73	1.51	1.29	1.07	1.07	1.07
	-20	2.89	2.61	2.33	2.05	1.77	1.49	1.21	1.11	1.11	1.11
	-15	3.17	2.83	2.49	2.16	1.82	1.48	1.14	1.14	1.14	1.14
	-10	3.32	2.96	2.60	2.24	1.88	1.51	1.15	0.92	0.92	0.92
	-7	3.41	3.04	2.66	2.29	1.91	1.54	1.16	0.79	0.79	0.79
	-2	3.17	2.90	2.62	2.35	2.08	1.80	1.53	1.26	0.99	0.71
	2	3.24	2.92	2.59	2.27	1.95	1.62	1.30	0.97	0.65	0.65
	7	3.15	2.83	2.52	2.20	1.88	1.57	1.25	0.93	0.62	0.30
	10	3.12	2.71	2.31	1.92	1.52	1.13	0.92	0.71	0.50	0.29
	12	3.10	2.70	2.30	1.91	1.51	1.11	0.90	0.70	0.49	0.28
	15	3.09	2.69	2.29	1.89	1.49	1.08	0.88	0.68	0.47	0.27
	20	3.08	2.67	2.26	1.86	1.45	1.04	0.84	0.65	0.45	0.25

COP		Load (%)									
		100	90	80	70	60	50	40	30	20	10
TO (°C)	-25	2.00	1.98	1.95	1.92	1.87	1.82	1.75	1.64	1.64	1.64
	-20	2.18	2.17	2.17	2.16	2.16	2.15	2.13	2.12	2.12	2.12
	-15	2.32	2.34	2.36	2.39	2.42	2.48	2.56	2.56	2.56	2.56
	-10	2.55	2.58	2.62	2.67	2.74	2.84	3.02	2.90	2.90	2.90
	-7	2.67	2.71	2.76	2.82	2.92	3.06	3.28	3.19	3.19	3.19
	-2	3.24	3.25	3.27	3.28	3.30	3.33	3.36	3.41	3.49	3.62
	2	3.54	3.55	3.57	3.59	3.62	3.66	3.73	3.83	4.05	4.05
	7	4.20	4.19	4.18	4.17	4.14	4.11	4.07	3.99	3.84	3.36
	10	4.44	4.66	4.80	5.01	5.32	5.85	5.67	5.45	5.05	4.07
	12	4.61	4.73	4.89	5.12	5.47	6.08	5.96	5.78	5.43	4.57
	15	4.69	4.83	5.02	5.30	5.72	6.45	6.43	6.29	6.03	5.38
	20	4.84	5.01	5.25	5.60	6.14	7.10	7.26	7.21	7.12	6.88

* Heating capacity and power input are maximum (peak) value during operation.
* Heating capacity and power input at 100% load are shown at maximum compressor operating frequency.
* Power input does not include water pump power.
* Heating capacity and power input are measured in accordance with EN14511.

TO : Outdoor temperature (DB°C)
LWT : Leaving water temperature (°C)

Specifications part load heating capacity and input (peak)LWT (°C) =45°C

Outdoor unit HWT-1101H(R)W-E

Capacity (kW)		Load (%)									
		100	90	80	70	60	50	40	30	20	10
TO (°C)	-25	5.36	4.85	4.34	3.83	3.33	2.82	2.31	1.80	1.80	1.80
	-20	6.25	5.79	5.14	4.49	3.84	3.19	2.54	2.29	2.29	2.29
	-15	7.52	6.73	5.94	5.15	4.35	3.56	2.77	2.77	2.77	2.77
	-10	8.10	7.30	6.50	5.70	4.91	4.11	3.31	2.50	2.50	2.50
	-7	8.44	7.64	6.84	6.04	5.24	4.44	3.64	2.33	2.33	2.33
	-2	10.03	8.95	7.87	6.79	5.71	4.64	3.56	2.48	2.48	2.48
	2	10.66	9.52	8.38	7.24	6.10	4.96	4.31	2.60	2.60	2.60
	7	12.41	11.22	10.03	8.84	7.64	6.45	5.26	4.07	2.88	2.88
	10	12.92	11.90	10.51	9.13	7.75	6.37	5.41	4.46	3.10	3.10
	12	13.26	11.91	10.56	9.21	7.86	6.51	5.42	4.33	3.24	3.24
	15	13.23	11.93	10.63	9.33	8.03	6.73	5.43	4.14	3.46	3.46
	20	13.19	11.97	10.75	9.53	8.31	7.09	5.46	3.82	3.82	3.82

Power input (kW)		Load (%)									
		100	90	80	70	60	50	40	30	20	10
TO (°C)	-25	3.17	2.89	2.60	2.32	2.03	1.75	1.46	1.18	1.18	1.18
	-20	3.49	3.15	2.80	2.45	2.10	1.75	1.40	1.26	1.26	1.26
	-15	3.82	3.41	2.99	2.58	2.17	1.75	1.34	1.34	1.34	1.34
	-10	3.74	3.35	2.95	2.56	2.16	1.77	1.38	1.12	1.12	1.12
	-7	3.69	3.31	2.93	2.55	2.16	1.78	1.40	0.98	0.98	0.98
	-2	3.69	3.29	2.90	2.50	2.11	1.71	1.32	0.92	0.92	0.92
	2	3.59	3.16	2.73	2.31	1.88	1.45	1.37	0.88	0.88	0.88
	7	3.71	3.34	2.98	2.61	2.25	1.88	1.52	1.15	0.79	0.79
	10	3.61	3.13	2.70	2.27	1.83	1.40	1.22	1.04	0.77	0.77
	12	3.55	3.12	2.69	2.26	1.83	1.40	1.19	0.97	0.76	0.76
	15	3.53	3.10	2.68	2.25	1.82	1.40	1.14	0.88	0.75	0.75
	20	3.50	3.08	2.66	2.23	1.81	1.39	1.06	0.72	0.72	0.72

COP		Load (%)									
		100	90	80	70	60	50	40	30	20	10
TO (°C)	-25	1.69	1.68	1.67	1.65	1.64	1.61	1.58	1.53	1.53	1.53
	-20	1.79	1.84	1.84	1.83	1.83	1.82	1.81	1.81	1.81	1.81
	-15	1.97	1.98	1.98	1.99	2.01	2.03	2.07	2.07	2.07	2.07
	-10	2.17	2.18	2.20	2.23	2.27	2.32	2.41	2.24	2.24	2.24
	-7	2.29	2.31	2.34	2.37	2.42	2.49	2.60	2.38	2.38	2.38
	-2	2.72	2.72	2.71	2.71	2.71	2.70	2.70	2.68	2.68	2.68
	2	2.97	3.01	3.07	3.14	3.25	3.42	3.15	2.95	2.95	2.95
	7	3.35	3.35	3.37	3.38	3.40	3.43	3.47	3.54	3.67	3.67
	10	3.58	3.80	3.90	4.03	4.22	4.54	4.44	4.30	4.02	4.02
	12	3.74	3.82	3.93	4.08	4.30	4.65	4.57	4.45	4.26	4.26
	15	3.75	3.84	3.97	4.15	4.40	4.82	4.78	4.71	4.64	4.64
	20	3.77	3.89	4.05	4.27	4.59	5.10	5.17	5.31	5.31	5.31

* Heating capacity and power input are maximum (peak) value during operation.
* Heating capacity and power input at 100% load are shown at maximum compressor operating frequency.
* Power input does not include water pump power.
* Heating capacity and power input are measured in accordance with EN14511.

TO : Outdoor temperature (DB°C)
LWT : Leaving water temperature (°C)

Specifications part load heating capacity and input (peak)LWT (°C) =55°C

Outdoor unit HWT-1101H(R)W-E

Capacity (kW)		Load (%)									
		100	90	80	70	60	50	40	30	20	10
TO (°C)	-25	5.33	4.82	4.31	3.80	3.29	2.78	2.27	1.76	1.76	1.76
	-20	6.07	5.47	4.88	4.28	3.68	3.09	2.49	2.24	2.24	2.24
	-15	6.81	6.13	5.44	4.76	4.08	3.39	2.71	2.71	2.71	2.71
	-10	7.15	6.41	5.68	4.94	4.20	3.47	2.82	2.35	2.35	2.35
	-7	7.72	6.88	6.04	5.19	4.35	3.51	2.88	2.14	2.14	2.14
	-2	9.23	8.26	7.30	6.33	5.37	4.40	3.44	2.47	2.47	2.47
	2	9.98	8.91	7.85	6.78	5.72	4.65	3.71	2.74	2.74	2.74
	7	10.17	9.13	8.09	7.05	6.00	4.96	3.92	2.88	2.88	2.88
	10	10.84	9.66	8.48	7.31	6.13	5.07	4.02	2.96	2.96	2.96
	12	11.29	10.02	8.75	7.48	6.21	5.15	4.08	3.02	3.02	3.02
	15	11.36	10.13	8.91	7.68	6.46	5.39	4.31	3.24	3.24	3.24
	20	11.47	10.32	9.17	8.02	6.87	5.78	4.70	3.61	3.61	3.61

Power input (kW)		Load (%)									
		100	90	80	70	60	50	40	30	20	10
TO (°C)	-25	3.69	3.36	3.03	2.70	2.37	2.04	1.71	1.38	1.38	1.38
	-20	3.68	3.34	3.00	2.67	2.33	1.99	1.65	1.49	1.49	1.49
	-15	3.67	3.32	2.98	2.63	2.28	1.94	1.59	1.59	1.59	1.59
	-10	3.63	3.26	2.88	2.51	2.14	1.77	1.54	1.33	1.33	1.33
	-7	3.78	3.36	2.93	2.51	2.09	1.67	1.52	1.17	1.17	1.17
	-2	3.83	3.46	3.08	2.71	2.33	1.96	1.58	1.20	1.20	1.20
	2	3.74	3.34	2.94	2.53	2.13	1.73	1.56	1.23	1.23	1.23
	7	3.62	3.26	2.91	2.55	2.19	1.84	1.48	1.13	1.13	1.13
	10	3.53	3.13	2.72	2.32	1.92	1.63	1.35	1.06	1.06	1.06
	12	3.47	3.04	2.60	2.17	1.73	1.49	1.26	1.02	1.02	1.02
	15	3.46	3.03	2.60	2.17	1.73	1.49	1.25	1.01	1.01	1.01
	20	3.44	3.02	2.59	2.17	1.74	1.49	1.24	0.99	0.99	0.99

COP		Load (%)									
		100	90	80	70	60	50	40	30	20	10
TO (°C)	-25	1.44	1.43	1.42	1.41	1.39	1.36	1.33	1.28	1.28	1.28
	-20	1.65	1.64	1.62	1.61	1.58	1.55	1.51	1.51	1.51	1.51
	-15	1.86	1.84	1.83	1.81	1.79	1.75	1.70	1.70	1.70	1.70
	-10	1.97	1.97	1.97	1.97	1.96	1.96	1.83	1.77	1.77	1.77
	-7	2.04	2.05	2.06	2.07	2.08	2.10	1.90	1.83	1.83	1.83
	-2	2.41	2.39	2.37	2.34	2.30	2.25	2.17	2.06	2.06	2.06
	2	2.67	2.67	2.67	2.68	2.68	2.69	2.37	2.23	2.23	2.23
	7	2.81	2.80	2.78	2.76	2.74	2.70	2.65	2.56	2.56	2.56
	10	3.07	3.09	3.12	3.15	3.20	3.11	2.98	2.79	2.79	2.79
	12	3.25	3.30	3.37	3.45	3.59	3.45	3.25	2.96	2.96	2.96
	15	3.28	3.35	3.43	3.55	3.72	3.61	3.45	3.21	3.21	3.21
	20	3.33	3.42	3.54	3.70	3.95	3.88	3.79	3.65	3.65	3.65

* Heating capacity and power input are maximum (peak) value during operation.
* Heating capacity and power input at 100% load are shown at maximum compressor operating frequency.
* Power input does not include water pump power.
* Heating capacity and power input are measured in accordance with EN14511.

TO : Outdoor temperature (DB°C)
LWT : Leaving water temperature (°C)

Specifications Low noise operation

Outdoor unit HWT-1101H(R)W-E

Capacity (kW)		LWT (°C)		
		35	45	55
TO (°C)	-25	2.92	2.88	2.93
	-20	3.54	3.47	3.51
	-15	4.15	4.05	4.09
	-10	4.94	4.76	4.75
	-7	5.42	5.19	5.15
	-2	6.31	6.05	6.04
	2	7.03	6.73	6.76
	7	8.28	7.97	7.79
	10	8.70	8.40	8.22
	12	8.98	8.69	8.51
	15	9.40	9.13	8.93
	20	10.10	9.85	9.65

Power input (kW)		LWT (°C)		
		35	45	55
TO (°C)	-25	1.54	1.80	2.18
	-20	1.62	1.88	2.28
	-15	1.70	1.95	2.38
	-10	1.77	2.06	2.48
	-7	1.80	2.11	2.54
	-2	1.75	2.10	2.52
	2	1.71	2.09	2.51
	7	1.65	2.07	2.51
	10	1.65	2.07	2.52
	12	1.64	2.07	2.53
	15	1.64	2.08	2.54
	20	1.63	2.08	2.56

COP		LWT (°C)		
		35	45	55
TO (°C)	-25	1.90	1.60	1.34
	-20	2.18	1.85	1.54
	-15	2.44	2.08	1.72
	-10	2.80	2.32	1.91
	-7	3.01	2.46	2.03
	-2	3.61	2.88	2.40
	2	4.11	3.22	2.69
	7	5.02	3.85	3.10
	10	5.29	4.06	3.26
	12	5.47	4.19	3.36
	15	5.74	4.40	3.52
	20	6.20	4.74	3.77

* Power input does not include water pump power.
* Heating capacity and power input at 100% load are measured in accordance with EN14511.

TO : Outdoor temperature (DB°C)
LWT : Leaving water temperature (°C)

Specifications part load cooling capacity and input LWT (°C) =7°C

Outdoor unit HWT-1101H(R)W-E

Capacity (kW)		Load (%)									
		100	90	80	70	60	50	40	30	20	10
TO (°C)	20	8.12	7.28	6.44	5.59	4.75	3.91	3.07	2.22	1.38	1.38
	27	7.91	7.11	6.30	5.50	4.69	3.89	3.08	2.27	1.47	1.47
	30	7.83	7.04	6.25	5.46	4.67	3.88	3.09	2.30	1.51	1.51
	35	8.00	7.20	6.39	5.59	4.79	3.98	3.18	2.37	1.57	1.57
	40	5.97	5.38	4.79	4.19	3.60	3.01	2.41	2.13	1.84	1.84
	43	4.95	4.46	3.97	3.48	2.98	2.49	2.00	2.00	2.00	2.00

Power input (kW)		Load (%)									
		100	90	80	70	60	50	40	30	20	10
TO (°C)	20	1.85	1.65	1.45	1.25	1.05	0.84	0.64	0.44	0.24	0.24
	27	2.25	2.02	1.79	1.56	1.33	1.10	0.87	0.64	0.41	0.41
	30	2.42	2.18	1.94	1.69	1.45	1.21	0.97	0.72	0.48	0.48
	35	2.86	2.54	2.27	1.99	1.72	1.43	1.16	0.88	0.60	0.60
	40	2.69	2.40	2.12	1.84	1.56	1.28	1.00	0.91	0.81	0.81
	43	2.67	2.38	2.09	1.80	1.51	1.22	0.93	0.93	0.93	0.93

COP		Load (%)									
		100	90	80	70	60	50	40	30	20	10
TO (°C)	20	4.39	4.41	4.45	4.49	4.55	4.63	4.77	5.04	5.75	5.75
	27	3.52	3.52	3.52	3.52	3.53	3.54	3.55	3.56	3.60	3.60
	30	3.23	3.23	3.22	3.22	3.21	3.21	3.20	3.18	3.14	3.14
	35	2.80	2.83	2.82	2.81	2.79	2.78	2.75	2.70	2.62	2.62
	40	2.22	2.24	2.25	2.27	2.30	2.34	2.40	2.35	2.28	2.28
	43	1.85	1.87	1.90	1.93	1.98	2.04	2.15	2.15	2.15	2.15

* Cooling capacity and power input at 100% load are shown at maximum compressor operating frequency.
* Power input does not include water pump power.
* Cooling capacity and power input at 100% load are measured in accordance with EN14511.

TO : Outdoor temperature (DB°C)
LWT : Leaving water temperature (°C)

Specifications part load cooling capacity and input LWT (°C) =13°C

Outdoor unit HWT-1101H(R)W-E

Capacity (kW)		Load (%)									
		100	90	80	70	60	50	40	30	20	10
TO (°C)	20	9.47	8.54	7.61	6.68	5.75	4.82	3.89	2.96	2.03	1.1
	27	9.37	8.46	7.55	6.64	5.74	4.83	3.92	3.01	2.10	1.61
	30	9.32	8.43	7.53	6.63	5.73	4.83	3.93	3.04	2.14	1.83
	35	9.25	8.37	7.49	6.60	5.72	4.84	3.96	3.07	2.19	2.19
	40	7.49	6.74	6.00	5.25	4.51	3.77	3.02	2.69	2.36	2.36
	43	6.43	5.77	5.11	4.45	3.78	3.12	2.46	2.46	2.46	2.46

Power input (kW)		Load (%)									
		100	90	80	70	60	50	40	30	20	10
TO (°C)	20	1.83	1.64	1.46	1.27	1.09	0.90	0.72	0.53	0.35	0.16
	27	2.37	2.13	1.89	1.65	1.41	1.17	0.93	0.69	0.45	0.35
	30	2.60	2.33	2.07	1.81	1.54	1.28	1.02	0.75	0.49	0.43
	35	2.98	2.68	2.38	2.07	1.77	1.47	1.17	0.86	0.56	0.56
	40	2.77	2.48	2.18	1.89	1.60	1.30	1.01	0.89	0.78	0.78
	43	2.65	2.36	2.07	1.78	1.49	1.20	0.91	0.91	0.91	0.91

COP		Load (%)									
		100	90	80	70	60	50	40	30	20	10
TO (°C)	20	5.17	5.19	5.22	5.25	5.29	5.34	5.43	5.57	5.87	6.88
	27	3.96	3.98	4.00	4.04	4.08	4.14	4.23	4.39	4.72	4.64
	30	3.59	3.61	3.64	3.67	3.71	3.78	3.87	4.04	4.37	4.28
	35	3.10	3.13	3.15	3.19	3.23	3.30	3.39	3.56	3.91	3.91
	40	2.70	2.72	2.75	2.78	2.83	2.90	3.00	3.01	3.03	3.03
	43	2.43	2.44	2.47	2.50	2.54	2.60	2.70	2.70	2.70	2.70

* Cooling capacity and power input at 100% load are shown at maximum compressor operating frequency.
* Power input does not include water pump power.
* Cooling capacity and power input at 100% load are measured in accordance with EN14511.

TO : Outdoor temperature (DB°C)
LWT : Leaving water temperature (°C)

Specifications part load cooling capacity and input LWT (°C) =18°C

Outdoor unit HWT-1101H(R)W-E

Capacity (kW)		Load (%)									
		100	90	80	70	60	50	40	30	20	10
TO (°C)	20	10.57	9.44	8.31	7.18	6.05	4.92	3.79	2.66	1.53	1.53
	27	10.43	9.32	8.21	7.10	5.99	4.88	3.77	2.66	2.06	2.06
	30	10.36	9.26	8.16	7.06	5.97	4.87	3.77	2.67	2.29	2.29
	35	10.26	9.18	8.09	7.01	5.92	4.84	3.75	2.67	2.67	2.67
	40	8.57	7.69	6.80	5.92	5.03	4.15	3.26	2.86	2.86	2.86
	43	7.56	6.80	6.03	5.27	4.50	3.74	2.97	2.97	2.97	2.97

Power input (kW)		Load (%)									
		100	90	80	70	60	50	40	30	20	10
TO (°C)	20	1.80	1.59	1.38	1.17	0.96	0.75	0.54	0.33	0.12	0.12
	27	2.39	2.11	1.83	1.54	1.26	0.98	0.70	0.42	0.31	0.31
	30	2.64	2.33	2.02	1.70	1.39	1.08	0.77	0.46	0.39	0.39
	35	3.06	2.45	2.04	1.67	1.33	1.04	0.77	0.52	0.52	0.52
	40	2.83	2.50	2.18	1.85	1.53	1.21	0.88	0.75	0.75	0.75
	43	2.69	2.39	2.09	1.79	1.48	1.18	0.88	0.88	0.88	0.88

COP		Load (%)									
		100	90	80	70	60	50	40	30	20	10
TO (°C)	20	5.87	5.94	6.02	6.14	6.30	6.56	7.02	8.06	12.75	12.75
	27	4.37	4.42	4.50	4.60	4.74	4.97	5.39	6.36	6.72	6.72
	30	3.93	3.98	4.05	4.15	4.28	4.50	4.90	5.84	5.92	5.92
	35	3.35	3.74	3.97	4.20	4.45	4.67	4.90	5.13	5.13	5.13
	40	3.03	3.07	3.12	3.19	3.29	3.44	3.70	3.84	3.84	3.84
	43	2.81	2.85	2.89	2.95	3.03	3.16	3.38	3.38	3.38	3.38

* Cooling capacity and power input at 100% load are shown at maximum compressor operating frequency.
* Power input does not include water pump power.
* Cooling capacity and power input at 100% load are measured in accordance with EN14511.

TO : Outdoor temperature (DB°C)
LWT : Leaving water temperature (°C)

Specifications Low noise operation

Outdoor unit HWT-1101H(R)W-E

Capacity (kW)		LWT (°C)		
		7	13	18
TO (°C)	20	5.70	6.47	7.12
	27	5.20	6.03	6.72
	30	4.98	5.83	6.55
	35	4.62	5.51	6.26
	40	3.99	4.90	5.67

Power input (kW)		LWT (°C)		
		7	13	18
TO (°C)	20	0.91	0.89	0.87
	27	1.12	1.11	1.10
	30	1.22	1.21	1.20
	35	1.37	1.36	1.36
	40	1.53	1.54	1.55

COP		LWT (°C)		
		7	13	18
TO (°C)	20	6.26	7.29	8.18
	27	4.62	5.43	6.12
	30	4.09	4.84	5.47
	35	3.37	4.04	4.60
	40	2.60	3.18	3.65

* Power input does not include water pump power.
* Cooling capacity and power input are measured in accordance with EN14511.

TO : Outdoor temperature (DB°C)
LWT : Leaving water temperature (°C)

Specifications part load heating capacity and input (peak)LWT (°C) =35°C

Outdoor unit HWT-1401H(R)W-E

Capacity (kW)		Load (%)									
		100	90	80	70	60	50	40	30	20	10
TO (°C)	-25	7.67	6.91	6.15	5.40	4.64	3.88	3.88	3.88	3.88	3.88
	-20	8.88	8.03	7.18	6.33	5.48	4.63	4.63	4.63	4.63	4.63
	-15	10.08	9.14	8.20	7.26	6.32	5.38	5.38	5.38	5.38	5.38
	-10	11.94	10.77	9.60	8.43	7.26	5.94	4.97	4.97	4.97	4.97
	-7	13.05	11.75	10.44	9.14	7.83	6.28	4.72	4.72	4.72	4.72
	-2	14.89	13.49	12.08	10.68	9.28	7.87	6.47	5.06	5.06	5.06
	2	16.13	14.22	12.32	10.41	9.14	7.88	6.61	5.34	5.34	5.34
	7	18.39	16.25	14.11	11.97	10.38	8.79	7.21	5.62	4.03	2.44
	10	19.57	17.27	14.98	12.69	10.83	8.97	7.11	5.25	3.39	2.75
	12	20.35	17.96	15.56	13.17	11.13	9.09	7.04	5.00	2.96	2.96
	15	19.71	17.57	15.43	13.29	11.26	9.23	7.20	5.17	3.14	3.14
	20	18.63	16.92	15.21	13.50	11.49	9.47	7.46	5.44	3.43	3.43

Power input (kW)		Load (%)									
		100	90	80	70	60	50	40	30	20	10
TO (°C)	-25	3.70	3.36	3.02	2.69	2.35	2.01	2.01	2.01	2.01	2.01
	-20	3.88	3.53	3.18	2.83	2.48	2.13	2.13	2.13	2.13	2.13
	-15	4.05	3.69	3.33	2.96	2.60	2.24	2.24	2.24	2.24	2.24
	-10	4.35	3.92	3.49	3.06	2.63	2.17	1.86	1.86	1.86	1.86
	-7	4.53	4.06	3.59	3.11	2.64	2.14	1.63	1.63	1.63	1.63
	-2	4.69	4.22	3.76	3.29	2.83	2.36	1.90	1.43	1.43	1.43
	2	4.62	3.93	3.23	2.54	2.22	1.91	1.59	1.27	1.27	1.27
	7	4.73	3.98	3.24	2.49	2.18	1.86	1.55	1.24	0.92	0.61
	10	4.71	3.96	3.20	2.45	2.11	1.76	1.42	1.07	0.73	0.60
	12	4.69	3.94	3.18	2.43	2.06	1.70	1.33	0.97	0.60	0.60
	15	4.50	3.81	3.12	2.43	2.06	1.69	1.31	0.94	0.57	0.57
	20	4.18	3.59	3.01	2.42	2.04	1.66	1.29	0.91	0.53	0.53

COP		Load (%)									
		100	90	80	70	60	50	40	30	20	10
TO (°C)	-25	2.07	2.06	2.04	2.01	1.98	1.93	1.93	1.93	1.93	1.93
	-20	2.29	2.28	2.26	2.24	2.21	2.18	2.18	2.18	2.18	2.18
	-15	2.49	2.48	2.47	2.45	2.43	2.40	2.40	2.40	2.40	2.40
	-10	2.74	2.75	2.75	2.76	2.77	2.73	2.67	2.67	2.67	2.67
	-7	2.88	2.89	2.91	2.93	2.97	2.94	2.90	2.90	2.90	2.90
	-2	3.17	3.19	3.21	3.24	3.28	3.33	3.41	3.54	3.54	3.54
	2	3.49	3.62	3.81	4.10	4.11	4.13	4.16	4.20	4.20	4.20
	7	3.89	4.08	4.36	4.81	4.77	4.72	4.65	4.54	4.36	4.00
	10	4.16	4.37	4.68	5.17	5.13	5.08	5.01	4.89	4.64	4.56
	12	4.34	4.56	4.89	5.42	5.39	5.35	5.29	5.18	4.93	4.93
	15	4.38	4.61	4.95	5.48	5.48	5.48	5.48	5.47	5.47	5.47
	20	4.46	4.71	5.06	5.58	5.62	5.69	5.80	6.00	6.47	6.47

* Heating capacity and power input are maximum (peak) value during operation.
* Heating capacity and power input at 100% load are shown at maximum compressor operating frequency.
* Power input does not include water pump power.
* Heating capacity and power input are measured in accordance with EN14511.

TO : Outdoor temperature (DB°C)
LWT : Leaving water temperature (°C)

Specifications part load heating capacity and input (peak)LWT (°C) =45°C

Outdoor unit HWT-1401H(R)W-E

Capacity (kW)		Load (%)									
		100	90	80	70	60	50	40	30	20	10
TO (°C)	-25	7.65	6.87	6.09	5.30	4.52	3.74	3.74	3.74	3.74	3.74
	-20	8.81	7.94	7.07	6.20	5.33	4.46	4.46	4.46	4.46	4.46
	-15	9.96	9.00	8.04	7.09	6.13	5.17	5.17	5.17	5.17	5.17
	-10	11.20	10.15	9.09	8.04	6.99	5.67	4.70	4.70	4.70	4.70
	-7	11.94	10.83	9.73	8.62	7.51	5.97	4.42	4.42	4.42	4.42
	-2	13.45	11.98	10.50	9.03	7.56	6.08	4.61	4.61	4.61	4.61
	2	14.77	13.21	11.64	10.08	8.67	7.26	5.85	5.85	5.85	5.85
	7	16.30	14.70	13.10	11.50	9.67	7.85	6.02	6.02	6.02	6.02
	10	17.39	15.68	13.98	12.27	10.38	8.48	6.58	6.58	6.58	6.58
	12	18.11	16.34	14.56	12.79	10.85	8.90	6.96	6.96	6.96	6.96
	15	17.44	15.77	14.10	12.28	10.35	8.42	7.20	7.20	7.20	7.20
	20	16.31	14.82	13.33	11.42	9.52	7.61	7.61	7.61	7.61	7.61

Power input (kW)		Load (%)									
		100	90	80	70	60	50	40	30	20	10
TO (°C)	-25	4.19	3.82	3.44	3.07	2.69	2.32	2.32	2.32	2.32	2.32
	-20	4.38	3.99	3.59	3.20	2.80	2.41	2.41	2.41	2.41	2.41
	-15	4.57	4.16	3.74	3.33	2.91	2.50	2.50	2.50	2.50	2.50
	-10	4.73	4.28	3.83	3.39	2.94	2.46	2.13	2.13	2.13	2.13
	-7	4.83	4.36	3.89	3.42	2.95	2.43	1.91	1.91	1.91	1.91
	-2	4.83	4.32	3.82	3.31	2.81	2.30	1.80	1.80	1.80	1.80
	2	4.69	4.14	3.58	3.03	2.61	2.18	1.76	1.76	1.76	1.76
	7	4.70	4.16	3.62	3.08	2.57	2.06	1.55	1.55	1.55	1.55
	10	4.73	4.17	3.61	3.04	2.54	2.04	1.54	1.54	1.54	1.54
	12	4.75	4.17	3.60	3.02	2.52	2.03	1.53	1.53	1.53	1.53
	15	4.54	3.96	3.38	2.83	2.33	1.83	1.52	1.52	1.52	1.52
	20	4.18	3.60	3.02	2.51	2.01	1.50	1.50	1.50	1.50	1.50

COP		Load (%)									
		100	90	80	70	60	50	40	30	20	10
TO (°C)	-25	1.83	1.80	1.77	1.73	1.68	1.61	1.61	1.61	1.61	1.61
	-20	2.01	1.99	1.97	1.94	1.90	1.85	1.85	1.85	1.85	1.85
	-15	2.18	2.17	2.15	2.13	2.10	2.07	2.07	2.07	2.07	2.07
	-10	2.37	2.37	2.37	2.38	2.38	2.31	2.21	2.21	2.21	2.21
	-7	2.47	2.48	2.50	2.52	2.55	2.45	2.31	2.31	2.31	2.31
	-2	2.78	2.77	2.75	2.73	2.69	2.64	2.57	2.57	2.57	2.57
	2	3.15	3.19	3.25	3.33	3.33	3.33	3.32	3.32	3.32	3.32
	7	3.47	3.53	3.62	3.73	3.76	3.81	3.88	3.88	3.88	3.88
	10	3.68	3.76	3.88	4.03	4.08	4.16	4.28	4.28	4.28	4.28
	12	3.81	3.91	4.05	4.24	4.30	4.39	4.55	4.55	4.55	4.55
	15	3.84	3.98	4.17	4.34	4.44	4.60	4.74	4.74	4.74	4.74
	20	3.90	4.12	4.41	4.55	4.74	5.07	5.07	5.07	5.07	5.07

* Heating capacity and power input are maximum (peak) value during operation.
* Heating capacity and power input at 100% load are shown at maximum compressor operating frequency.
* Power input does not include water pump power.
* Heating capacity and power input are measured in accordance with EN14511.

TO : Outdoor temperature (DB°C)
LWT : Leaving water temperature (°C)

Specifications part load heating capacity and input (peak)LWT (°C) =55°C

Outdoor unit HWT-1401H(R)W-E

Capacity (kW)		Load (%)									
		100	90	80	70	60	50	40	30	20	10
TO (°C)	-25	7.61	6.89	6.16	6.16	6.16	6.16	6.16	6.16	6.16	6.16
	-20	8.28	7.45	6.63	6.16	5.70	5.70	5.70	5.70	5.70	5.70
	-15	8.94	8.02	7.09	6.17	5.24	5.24	5.24	5.24	5.24	5.24
	-10	9.92	8.91	7.91	6.91	5.92	5.27	4.62	4.62	4.62	4.62
	-7	10.50	9.45	8.41	7.36	6.33	5.29	4.25	4.25	4.25	4.25
	-2	11.87	10.71	9.56	8.40	7.25	6.09	4.93	4.93	4.93	4.93
	2	12.93	11.83	10.72	9.62	8.24	6.86	5.48	5.48	5.48	5.48
	7	14.31	12.81	11.30	9.89	8.49	7.08	5.67	5.67	5.67	5.67
	10	15.22	13.65	12.08	10.61	9.14	7.67	6.20	6.20	6.20	6.20
	12	15.83	14.22	12.60	11.09	9.58	8.07	6.56	6.56	6.56	6.56
	15	15.31	13.85	12.28	10.78	9.27	7.77	6.83	6.83	6.83	6.83
	20	14.45	13.25	11.76	10.26	8.77	7.27	7.27	7.27	7.27	7.27

Power input (kW)		Load (%)									
		100	90	80	70	60	50	40	30	20	10
TO (°C)	-25	4.81	4.43	4.05	4.05	4.05	4.05	4.05	4.05	4.05	4.05
	-20	4.82	4.40	3.98	3.75	3.53	3.53	3.53	3.53	3.53	3.53
	-15	4.82	4.37	3.91	3.46	3.00	3.00	3.00	3.00	3.00	3.00
	-10	4.82	4.37	3.92	3.46	3.05	2.80	2.55	2.55	2.55	2.55
	-7	4.82	4.37	3.92	3.47	3.07	2.68	2.28	2.28	2.28	2.28
	-2	4.80	4.37	3.94	3.51	3.08	2.65	2.22	2.22	2.22	2.22
	2	4.68	4.30	3.91	3.53	3.08	2.62	2.17	2.17	2.17	2.17
	7	4.68	4.15	3.62	3.19	2.77	2.34	1.91	1.91	1.91	1.91
	10	4.68	4.14	3.61	3.19	2.76	2.34	1.92	1.92	1.92	1.92
	12	4.68	4.14	3.60	3.18	2.76	2.34	1.92	1.92	1.92	1.92
	15	4.46	3.94	3.44	3.02	2.60	2.18	1.92	1.92	1.92	1.92
	20	4.08	3.61	3.19	2.76	2.34	1.91	1.91	1.91	1.91	1.91

COP		Load (%)									
		100	90	80	70	60	50	40	30	20	10
TO (°C)	-25	1.58	1.55	1.52	1.52	1.52	1.52	1.52	1.52	1.52	1.52
	-20	1.72	1.69	1.66	1.64	1.62	1.62	1.62	1.62	1.62	1.62
	-15	1.85	1.84	1.81	1.78	1.75	1.75	1.75	1.75	1.75	1.75
	-10	2.06	2.04	2.02	2.00	1.94	1.88	1.81	1.81	1.81	1.81
	-7	2.18	2.16	2.14	2.12	2.06	1.98	1.86	1.86	1.86	1.86
	-2	2.47	2.45	2.43	2.39	2.35	2.30	2.22	2.22	2.22	2.22
	2	2.76	2.75	2.74	2.73	2.68	2.61	2.53	2.53	2.53	2.53
	7	3.06	3.09	3.12	3.10	3.07	3.03	2.97	2.97	2.97	2.97
	10	3.25	3.29	3.35	3.33	3.31	3.28	3.24	3.24	3.24	3.24
	12	3.38	3.43	3.50	3.49	3.47	3.45	3.42	3.42	3.42	3.42
	15	3.44	3.51	3.57	3.57	3.57	3.57	3.56	3.56	3.56	3.56
	20	3.54	3.67	3.69	3.72	3.75	3.81	3.81	3.81	3.81	3.81

* Heating capacity and power input are maximum (peak) value during operation.
* Heating capacity and power input at 100% load are shown at maximum compressor operating frequency.
* Power input does not include water pump power.
* Heating capacity and power input are measured in accordance with EN14511.

TO : Outdoor temperature (DB°C)
LWT : Leaving water temperature (°C)

Specifications Low noise operation

Outdoor unit HWT-1401H(R)W-E

Capacity (kW)		LWT (°C)		
		35	45	55
TO (°C)	-25	4.27	4.22	—
	-20	4.99	4.88	4.88
	-15	5.71	5.53	5.63
	-10	6.68	6.50	6.38
	-7	7.26	7.08	6.83
	-2	8.57	8.37	8.27
	2	9.61	9.40	9.42
	7	11.12	10.68	10.56
	10	12.02	11.63	11.51
	12	12.62	12.26	12.15
	15	12.85	12.53	12.45
	20	13.22	12.97	12.95

Power input (kW)		LWT (°C)		
		35	45	55
TO (°C)	-25	2.14	2.52	—
	-20	2.25	2.58	3.08
	-15	2.35	2.64	3.16
	-10	2.44	2.73	3.24
	-7	2.49	2.79	3.29
	-2	2.46	2.84	3.37
	2	2.44	2.88	3.44
	7	2.45	3.05	3.44
	10	2.43	3.03	3.53
	12	2.42	3.02	3.59
	15	2.42	3.02	3.59
	20	2.42	3.01	3.60

COP		LWT (°C)		
		35	45	55
TO (°C)	-25	2.00	1.67	—
	-20	2.22	1.89	1.59
	-15	2.43	2.09	1.78
	-10	2.74	2.38	1.97
	-7	2.92	2.54	2.08
	-2	3.48	2.95	2.45
	2	3.94	3.26	2.74
	7	4.54	3.50	3.07
	10	4.94	3.84	3.26
	12	5.21	4.06	3.38
	15	5.31	4.15	3.46
	20	5.46	4.31	3.60

* Power input does not include water pump power.
* Heating capacity and power input at 100% load are measured in accordance with EN14511.

TO : Outdoor temperature (DB°C)
LWT : Leaving water temperature (°C)

Specifications part load cooling capacity and input LWT (°C) =7°C

Outdoor unit HWT-1401H(R)W-E

Capacity (kW)		Load (%)									
		100	90	80	70	60	50	40	30	20	10
TO (°C)	20	11.60	10.49	9.39	8.28	7.18	6.07	4.96	3.86	2.75	2.75
	27	11.11	10.04	8.97	7.91	6.84	5.78	4.71	3.65	3.06	3.06
	30	10.89	9.85	8.80	7.75	6.70	5.65	4.61	3.56	3.19	3.19
	35	10.54	9.52	8.50	7.48	6.47	5.45	4.43	3.41	3.41	3.41
	40	7.09	6.57	6.06	5.54	5.03	4.51	4.00	3.49	3.49	3.49
	43	6.62	6.00	5.38	4.77	4.15	3.53	3.53	3.53	3.53	3.53

Power input (kW)		Load (%)									
		100	90	80	70	60	50	40	30	20	10
TO (°C)	20	2.99	2.70	2.42	2.13	1.85	1.56	1.27	0.99	0.70	0.70
	27	3.65	3.28	2.91	2.54	2.17	1.80	1.42	1.05	0.90	0.90
	30	3.94	3.53	3.12	2.71	2.31	1.90	1.49	1.08	0.99	0.99
	35	4.41	3.94	3.47	3.00	2.54	2.07	1.60	1.13	1.13	1.13
	40	3.65	3.36	3.07	2.77	2.48	2.19	1.90	1.61	1.61	1.61
	43	3.65	3.30	2.95	2.59	2.24	1.89	1.89	1.89	1.89	1.89

COP		Load (%)									
		100	90	80	70	60	50	40	30	20	10
TO (°C)	20	3.88	3.88	3.88	3.89	3.89	3.89	3.90	3.91	3.93	3.93
	27	3.04	3.06	3.08	3.12	3.16	3.22	3.31	3.46	3.40	3.40
	30	2.77	2.79	2.82	2.86	2.91	2.98	3.09	3.29	3.23	3.23
	35	2.39	2.42	2.45	2.49	2.55	2.64	2.77	3.02	3.02	3.02
	40	1.94	1.96	1.98	2.00	2.03	2.06	2.11	2.17	2.17	2.17
	43	1.81	1.82	1.83	1.84	1.85	1.87	1.87	1.87	1.87	1.87

* Cooling capacity and power input at 100% load are shown at maximum compressor operating frequency.
* Power input does not include water pump power.
* Cooling capacity and power input at 100% load are measured in accordance with EN14511.

TO : Outdoor temperature (DB°C)
LWT : Leaving water temperature (°C)

Specifications part load cooling capacity and input LWT (°C) =13°C

Outdoor unit HWT-1401H(R)W-E

Capacity (kW)		Load (%)									
		100	90	80	70	60	50	40	30	20	10
TO (°C)	20	13.44	12.14	10.84	9.55	8.25	6.95	5.65	4.36	3.06	1.76
	27	13.04	11.78	10.52	9.26	8.00	6.74	5.48	4.22	3.53	2.84
	30	12.87	11.63	10.39	9.14	7.90	6.65	5.41	4.17	3.73	3.30
	35	12.59	11.37	10.16	8.94	7.72	6.50	5.29	4.07	4.07	4.07
	40	9.02	8.41	7.80	7.20	6.59	5.98	5.37	4.76	4.76	4.76
	43	8.54	7.70	6.86	6.01	5.17	5.17	5.17	5.17	5.17	5.17

Power input (kW)		Load (%)									
		100	90	80	70	60	50	40	30	20	10
TO (°C)	20	3.01	2.72	2.42	2.13	1.83	1.54	1.24	0.95	0.65	0.36
	27	3.78	3.39	2.99	2.60	2.20	1.80	1.41	1.01	0.85	0.70
	30	4.12	3.68	3.24	2.80	2.36	1.92	1.48	1.04	0.94	0.84
	35	4.67	4.16	3.64	3.13	2.62	2.11	1.59	1.08	1.08	1.08
	40	3.64	3.35	3.06	2.77	2.48	2.19	1.90	1.61	1.61	1.61
	43	3.64	3.21	2.78	2.35	1.92	1.92	1.92	1.92	1.92	1.92

COP		Load (%)									
		100	90	80	70	60	50	40	30	20	10
TO (°C)	20	4.47	4.47	4.48	4.49	4.50	4.52	4.55	4.59	4.67	4.89
	27	3.45	3.48	3.52	3.57	3.64	3.74	3.90	4.18	4.14	4.08
	30	3.13	3.16	3.21	3.27	3.35	3.47	3.66	4.02	3.98	3.93
	35	2.70	2.74	2.79	2.85	2.95	3.09	3.32	3.77	3.77	3.77
	40	2.48	2.51	2.55	2.60	2.66	2.73	2.83	2.96	2.96	2.96
	43	2.35	2.40	2.47	2.56	2.69	2.69	2.69	2.69	2.69	2.69

* Cooling capacity and power input at 100% load are shown at maximum compressor operating frequency.
* Power input does not include water pump power.
* Cooling capacity and power input at 100% load are measured in accordance with EN14511.

TO : Outdoor temperature (DB°C)
LWT : Leaving water temperature (°C)

Specifications part load cooling capacity and input LWT (°C) =18°C

Outdoor unit HWT-1401H(R)W-E

Capacity (kW)		Load (%)									
		100	90	80	70	60	50	40	30	20	10
TO (°C)	20	14.76	13.36	11.95	10.55	9.15	7.74	6.34	4.94	3.53	2.13
	27	14.24	12.86	11.48	10.10	8.71	7.33	5.95	4.57	3.19	2.44
	30	14.01	12.64	11.27	9.90	8.53	7.16	5.79	4.42	3.04	2.58
	35	13.64	12.29	10.93	9.58	8.22	6.87	5.51	4.16	2.80	2.80
	40	10.47	9.75	9.03	8.31	7.59	6.87	6.15	5.43	4.71	4.71
	43	9.74	8.77	7.80	6.83	5.86	5.86	5.86	5.86	5.86	5.86

Power input (kW)		Load (%)									
		100	90	80	70	60	50	40	30	20	10
TO (°C)	20	3.11	2.80	2.50	2.19	1.89	1.58	1.28	0.97	0.67	0.36
	27	3.84	3.44	3.04	2.64	2.24	1.84	1.44	1.04	0.63	0.47
	30	4.16	3.71	3.27	2.83	2.39	1.95	1.51	1.06	0.62	0.52
	35	4.68	4.17	3.66	3.15	2.64	2.13	1.62	1.11	0.60	0.60
	40	3.65	3.37	3.09	2.81	2.53	2.26	1.98	1.70	1.42	1.42
	43	3.65	3.22	2.78	2.35	1.91	1.91	1.91	1.91	1.91	1.91

COP		Load (%)									
		100	90	80	70	60	50	40	30	20	10
TO (°C)	20	4.75	4.76	4.78	4.81	4.85	4.89	4.97	5.08	5.31	5.92
	27	3.71	3.74	3.77	3.82	3.89	3.99	4.14	4.41	5.03	5.18
	30	3.37	3.40	3.44	3.50	3.57	3.68	3.84	4.15	4.90	4.96
	35	2.91	2.95	2.99	3.04	3.11	3.22	3.40	3.74	4.67	4.67
	40	2.87	2.89	2.92	2.95	2.99	3.05	3.11	3.20	3.32	3.32
	43	2.67	2.73	2.81	2.91	3.07	3.07	3.07	3.07	3.07	3.07

* Cooling capacity and power input at 100% load are shown at maximum compressor operating frequency.
* Power input does not include water pump power.
* Cooling capacity and power input at 100% load are measured in accordance with EN14511.

TO : Outdoor temperature (DB°C)
LWT : Leaving water temperature (°C)

Specifications Low noise operation

Outdoor unit HWT-1401H(R)W-E

Capacity (kW)		LWT (°C)		
		7	13	18
TO (°C)	20	9.04	10.36	11.46
	27	8.26	9.54	10.60
	30	7.92	9.18	10.23
	35	7.36	8.59	9.62
	40	5.85	7.36	8.61

Power input (kW)		LWT (°C)		
		7	13	18
TO (°C)	20	1.83	1.86	1.88
	27	2.18	2.23	2.27
	30	2.32	2.39	2.44
	35	2.57	2.65	2.72
	40	2.78	2.90	3.00

COP		LWT (°C)		
		7	13	18
TO (°C)	20	4.94	5.58	6.10
	27	3.80	4.28	4.67
	30	3.41	3.85	4.19
	35	2.86	3.24	3.54
	40	2.11	2.54	2.87

* Power input does not include water pump power.
* Cooling capacity and power input are measured in accordance with EN14511.

TO : Outdoor temperature (DB°C)
LWT : Leaving water temperature (°C)

Specifications part load heating capacity and input (peak)LWT (°C) =35°C

Outdoor unit HWT-801H8(R)W-E

Capacity (kW)		Load (%)									
		100	90	80	70	60	50	40	30	20	10
TO (°C)	-25	4.76	4.28	3.81	3.33	3.25	3.25	3.25	3.25	3.25	3.25
	-20	5.64	5.08	4.51	3.95	3.85	3.85	3.85	3.85	3.85	3.85
	-15	6.52	5.87	5.22	4.56	4.45	4.45	4.45	4.45	4.45	4.45
	-10	7.59	6.83	6.07	5.31	5.17	5.17	5.17	5.17	5.17	5.17
	-7	8.23	7.41	6.58	5.76	4.94	4.21	4.21	4.21	4.21	4.21
	-2	9.58	8.62	7.66	6.71	5.75	4.90	4.90	4.90	4.90	4.90
	2	10.66	9.59	8.53	7.46	6.40	5.33	5.33	5.33	5.33	5.33
	7	12.27	11.04	9.82	8.59	7.36	6.14	4.91	3.68	2.65	2.65
	10	12.86	11.57	10.29	9.00	7.72	6.43	5.14	3.86	2.78	2.78
	12	13.25	11.93	10.60	9.28	7.95	6.63	5.30	3.98	2.86	2.86
	15	13.84	12.46	11.07	9.69	8.30	6.92	5.54	4.15	2.99	2.99
	20	13.63	12.27	10.90	9.54	8.18	6.82	5.45	4.09	2.94	2.94

Power input (kW)		Load (%)									
		100	90	80	70	60	50	40	30	20	10
TO (°C)	-25	2.26	2.07	1.87	1.68	1.64	1.64	1.64	1.64	1.64	1.64
	-20	2.35	2.20	1.99	1.79	1.76	1.76	1.76	1.76	1.76	1.76
	-15	2.44	2.24	2.02	1.83	1.79	1.79	1.79	1.79	1.79	1.79
	-10	2.53	2.31	2.06	1.83	1.79	1.79	1.79	1.79	1.79	1.79
	-7	2.58	2.33	2.07	1.83	1.60	1.41	1.41	1.41	1.41	1.41
	-2	2.70	2.39	2.10	1.84	1.59	1.38	1.38	1.38	1.38	1.38
	2	2.80	2.38	2.08	1.81	1.55	1.30	1.30	1.30	1.30	1.30
	7	2.68	2.32	2.01	1.72	1.46	1.21	1.00	0.80	0.65	0.65
	10	2.66	2.25	1.94	1.66	1.39	1.16	0.94	0.76	0.62	0.62
	12	2.65	2.19	1.88	1.60	1.35	1.11	0.91	0.72	0.59	0.59
	15	2.63	2.33	1.99	1.68	1.40	1.14	0.91	0.70	0.55	0.55
	20	2.78	2.30	1.96	1.64	1.35	1.08	0.84	0.63	0.46	0.46

COP		Load (%)									
		100	90	80	70	60	50	40	30	20	10
TO (°C)	-25	2.11	2.07	2.04	1.99	1.98	1.98	1.98	1.98	1.98	1.98
	-20	2.40	2.31	2.27	2.20	2.19	2.19	2.19	2.19	2.19	2.19
	-15	2.67	2.62	2.58	2.50	2.48	2.48	2.48	2.48	2.48	2.48
	-10	3.00	2.96	2.94	2.90	2.88	2.88	2.88	2.88	2.88	2.88
	-7	3.19	3.18	3.18	3.15	3.08	2.98	2.98	2.98	2.98	2.98
	-2	3.55	3.61	3.64	3.65	3.62	3.55	3.55	3.55	3.55	3.55
	2	3.81	4.03	4.09	4.13	4.13	4.08	4.08	4.08	4.08	4.08
	7	4.58	4.75	4.88	4.98	5.05	5.05	4.93	4.60	4.05	4.05
	10	4.83	5.14	5.30	5.44	5.53	5.56	5.45	5.11	4.51	4.51
	12	5.00	5.45	5.63	5.79	5.91	5.95	5.85	5.50	4.87	4.87
	15	5.26	5.35	5.56	5.76	5.94	6.07	6.09	5.90	5.41	5.41
	20	4.90	5.34	5.58	5.82	6.07	6.30	6.48	6.54	6.35	6.35

* Heating capacity and power input are maximum (peak) value during operation.
* Heating capacity and power input at 100% load are shown at maximum compressor operating frequency.
* Power input does not include water pump power.
* Heating capacity and power input are measured in accordance with EN14511.

TO : Outdoor temperature (DB°C)
LWT : Leaving water temperature (°C)

Specifications part load heating capacity and input (peak)LWT (°C) =45°C

Outdoor unit HWT-801H8(R)W-E

Capacity (kW)		Load (%)									
		100	90	80	70	60	50	40	30	20	10
TO (°C)	-25	4.73	4.26	3.78	3.31	3.23	3.23	3.23	3.23	3.23	3.23
	-20	5.56	5.01	4.45	3.89	3.79	3.79	3.79	3.79	3.79	3.79
	-15	6.40	5.76	5.12	4.48	4.36	4.36	4.36	4.36	4.36	4.36
	-10	7.47	6.72	5.98	5.23	5.09	5.09	5.09	5.09	5.09	5.09
	-7	8.12	7.30	6.49	5.68	4.87	4.15	4.15	4.15	4.15	4.15
	-2	9.45	8.50	7.56	6.61	5.67	4.83	4.83	4.83	4.83	4.83
	2	10.51	9.46	8.41	7.36	6.31	5.37	5.37	5.37	5.37	5.37
	7	12.02	10.82	9.62	8.41	7.21	6.01	6.01	6.01	6.01	6.01
	10	12.58	11.33	10.07	8.81	7.55	6.29	6.29	6.29	6.29	6.29
	12	12.96	11.66	10.37	9.07	7.78	6.48	6.48	6.48	6.48	6.48
	15	13.53	12.17	10.82	9.47	8.12	6.76	6.76	6.76	6.76	6.76
	20	13.54	12.18	10.83	9.47	8.12	6.77	6.77	6.77	6.77	6.77

Power input (kW)		Load (%)									
		100	90	80	70	60	50	40	30	20	10
TO (°C)	-25	2.61	2.47	2.22	1.97	1.93	1.93	1.93	1.93	1.93	1.93
	-20	2.73	2.59	2.34	2.09	2.05	2.05	2.05	2.05	2.05	2.05
	-15	2.84	2.62	2.36	2.12	2.07	2.07	2.07	2.07	2.07	2.07
	-10	2.99	2.73	2.46	2.21	2.17	2.17	2.17	2.17	2.17	2.17
	-7	3.08	2.76	2.48	2.23	1.99	1.80	1.80	1.80	1.80	1.80
	-2	3.18	2.86	2.54	2.23	1.94	1.70	1.70	1.70	1.70	1.70
	2	3.26	2.88	2.55	2.23	1.91	1.64	1.64	1.64	1.64	1.64
	7	3.24	2.90	2.54	2.21	1.89	1.58	1.58	1.58	1.58	1.58
	10	3.23	2.84	2.47	2.13	1.79	1.48	1.48	1.48	1.48	1.48
	12	3.22	2.79	2.42	2.07	1.73	1.40	1.40	1.40	1.40	1.40
	15	3.21	2.88	2.49	2.12	1.76	1.42	1.42	1.42	1.42	1.42
	20	3.31	2.80	2.40	2.02	1.67	1.34	1.34	1.34	1.34	1.34

COP		Load (%)									
		100	90	80	70	60	50	40	30	20	10
TO (°C)	-25	1.81	1.72	1.70	1.68	1.67	1.67	1.67	1.67	1.67	1.67
	-20	2.04	1.93	1.90	1.86	1.85	1.85	1.85	1.85	1.85	1.85
	-15	2.25	2.20	2.17	2.12	2.10	2.10	2.10	2.10	2.10	2.10
	-10	2.50	2.46	2.43	2.37	2.35	2.35	2.35	2.35	2.35	2.35
	-7	2.64	2.64	2.61	2.55	2.45	2.31	2.31	2.31	2.31	2.31
	-2	2.97	2.97	2.98	2.96	2.91	2.84	2.84	2.84	2.84	2.84
	2	3.22	3.28	3.30	3.31	3.30	3.28	3.28	3.28	3.28	3.28
	7	3.72	3.73	3.78	3.81	3.82	3.80	3.80	3.80	3.80	3.80
	10	3.90	3.99	4.07	4.14	4.21	4.27	4.27	4.27	4.27	4.27
	12	4.03	4.18	4.28	4.38	4.49	4.62	4.62	4.62	4.62	4.62
	15	4.21	4.22	4.35	4.47	4.61	4.75	4.75	4.75	4.75	4.75
	20	4.09	4.35	4.52	4.70	4.88	5.05	5.05	5.05	5.05	5.05

* Heating capacity and power input are maximum (peak) value during operation.
* Heating capacity and power input at 100% load are shown at maximum compressor operating frequency.
* Power input does not include water pump power.
* Heating capacity and power input are measured in accordance with EN14511.

TO : Outdoor temperature (DB°C)
LWT : Leaving water temperature (°C)

Specifications part load heating capacity and input (peak)LWT (°C) =55°C

Outdoor unit HWT-801H8(R)W-E

Capacity (kW)		Load (%)									
		100	90	80	70	60	50	40	30	20	10
TO (°C)	-25	4.70	4.70	4.70	4.70	4.70	4.70	4.70	4.70	4.70	4.70
	-20	5.49	4.94	4.39	3.84	3.74	3.74	3.74	3.74	3.74	3.74
	-15	6.27	5.64	5.02	4.39	4.28	4.28	4.28	4.28	4.28	4.28
	-10	7.35	6.62	5.88	5.15	5.01	5.01	5.01	5.01	5.01	5.01
	-7	8.00	7.20	6.40	5.60	4.80	4.09	4.09	4.09	4.09	4.09
	-2	9.31	8.38	7.45	6.52	5.59	4.76	4.76	4.76	4.76	4.76
	2	10.36	9.32	8.29	7.25	6.22	5.30	5.30	5.30	5.30	5.30
	7	11.77	10.59	9.42	8.24	7.06	5.89	5.89	5.89	5.89	5.89
	10	12.31	11.08	9.85	8.62	7.39	6.16	6.16	6.16	6.16	6.16
	12	12.67	11.40	10.14	8.87	7.60	6.34	6.34	6.34	6.34	6.34
	15	13.21	11.89	10.57	9.25	7.93	6.61	6.61	6.61	6.61	6.61
	20	13.44	12.10	10.75	9.41	8.06	6.72	6.72	6.72	6.72	6.72

Power input (kW)		Load (%)									
		100	90	80	70	60	50	40	30	20	10
TO (°C)	-25	2.96	2.96	2.96	2.96	2.96	2.96	2.96	2.96	2.96	2.96
	-20	3.10	2.99	2.72	2.46	2.41	2.41	2.41	2.41	2.41	2.41
	-15	3.24	3.02	2.72	2.44	2.39	2.39	2.39	2.39	2.39	2.39
	-10	3.45	3.21	2.90	2.60	2.54	2.54	2.54	2.54	2.54	2.54
	-7	3.57	3.27	2.95	2.65	2.37	2.13	2.13	2.13	2.13	2.13
	-2	3.65	3.38	3.03	2.70	2.39	2.12	2.12	2.12	2.12	2.12
	2	3.72	3.38	3.03	2.69	2.37	2.09	2.09	2.09	2.09	2.09
	7	3.79	3.40	3.02	2.66	2.31	1.97	1.97	1.97	1.97	1.97
	10	3.79	3.31	2.93	2.58	2.24	1.91	1.91	1.91	1.91	1.91
	12	3.79	3.24	2.87	2.51	2.18	1.87	1.87	1.87	1.87	1.87
	15	3.79	3.33	2.93	2.55	2.20	1.88	1.88	1.88	1.88	1.88
	20	3.84	3.30	2.88	2.48	2.13	1.81	1.81	1.81	1.81	1.81

COP		Load (%)									
		100	90	80	70	60	50	40	30	20	10
TO (°C)	-25	1.59	1.59	1.59	1.59	1.59	1.59	1.59	1.59	1.59	1.59
	-20	1.77	1.65	1.61	1.56	1.55	1.55	1.55	1.55	1.55	1.55
	-15	1.94	1.87	1.84	1.80	1.79	1.79	1.79	1.79	1.79	1.79
	-10	2.13	2.06	2.03	1.98	1.97	1.97	1.97	1.97	1.97	1.97
	-7	2.24	2.20	2.17	2.11	2.03	1.92	1.92	1.92	1.92	1.92
	-2	2.55	2.48	2.46	2.41	2.34	2.25	2.25	2.25	2.25	2.25
	2	2.78	2.76	2.74	2.69	2.62	2.53	2.53	2.53	2.53	2.53
	7	3.11	3.12	3.11	3.09	3.05	2.98	2.98	2.98	2.98	2.98
	10	3.25	3.35	3.36	3.34	3.30	3.21	3.21	3.21	3.21	3.21
	12	3.34	3.52	3.54	3.53	3.49	3.39	3.39	3.39	3.39	3.39
	15	3.49	3.57	3.61	3.63	3.60	3.52	3.52	3.52	3.52	3.52
	20	3.50	3.66	3.74	3.79	3.79	3.71	3.71	3.71	3.71	3.71

* Heating capacity and power input are maximum (peak) value during operation.
* Heating capacity and power input at 100% load are shown at maximum compressor operating frequency.
* Power input does not include water pump power.
* Heating capacity and power input are measured in accordance with EN14511.

TO : Outdoor temperature (DB°C)
LWT : Leaving water temperature (°C)

Specifications Low noise operation

Outdoor unit HWT-801H8(R)W-E

Capacity (kW)		LWT (°C)		
		35	45	55
TO (°C)	-25	2.94	2.88	—
	-20	3.58	3.53	3.48
	-15	4.21	4.17	4.12
	-10	5.00	4.88	4.76
	-7	5.47	5.31	5.15
	-2	6.41	6.22	6.03
	2	7.17	6.96	6.74
	7	8.14	7.92	7.69
	10	8.56	8.36	8.16
	12	8.84	8.65	8.47
	15	9.25	9.10	8.94
	20	9.95	9.84	9.72

Power input (kW)		LWT (°C)		
		35	45	55
TO (°C)	-25	1.43	1.67	—
	-20	1.54	1.86	2.19
	-15	1.64	1.94	2.24
	-10	1.68	1.99	2.29
	-7	1.71	2.02	2.32
	-2	1.75	2.08	2.41
	2	1.78	2.13	2.48
	7	1.78	2.14	2.50
	10	1.78	2.16	2.53
	12	1.78	2.17	2.55
	15	1.77	2.18	2.59
	20	1.77	2.21	2.64

COP		LWT (°C)		
		35	45	55
TO (°C)	-25	2.06	1.72	—
	-20	2.33	1.89	1.59
	-15	2.57	2.15	1.84
	-10	2.97	2.46	2.08
	-7	3.20	2.64	2.22
	-2	3.67	2.99	2.50
	2	4.03	3.27	2.72
	7	4.57	3.70	3.08
	10	4.81	3.88	3.22
	12	4.97	4.00	3.32
	15	5.22	4.17	3.46
	20	5.62	4.46	3.68

* Power input does not include water pump power.
* Heating capacity and power input at 100% load are measured in accordance with EN14511.

TO : Outdoor temperature (DB°C)
LWT : Leaving water temperature (°C)

Specifications part load cooling capacity and input LWT (°C) =7°C

Outdoor unit HWT-801H8(R)W-E

Capacity (kW)		Load (%)									
		100	90	80	70	60	50	40	30	20	10
TO (°C)	20	8.07	7.26	6.46	5.65	4.84	4.04	3.23	2.80	2.80	2.80
	27	8.25	7.43	6.60	5.78	4.95	4.13	3.61	3.61	3.61	3.61
	30	7.95	7.15	6.36	5.56	4.77	3.97	3.48	3.48	3.48	3.48
	35	7.44	6.70	5.95	5.21	4.46	3.72	3.26	3.26	3.26	3.26
	40	5.81	5.23	4.65	4.07	3.63	3.63	3.63	3.63	3.63	3.63
	43	4.83	4.35	3.86	3.38	3.02	3.02	3.02	3.02	3.02	3.02

Power input (kW)		Load (%)									
		100	90	80	70	60	50	40	30	20	10
TO (°C)	20	1.95	1.65	1.45	1.26	1.09	0.94	0.80	0.73	0.73	0.73
	27	2.38	2.12	1.83	1.57	1.34	1.13	1.01	1.01	1.01	1.01
	30	2.48	2.19	1.89	1.62	1.38	1.16	1.04	1.04	1.04	1.04
	35	2.63	2.27	1.95	1.67	1.43	1.21	1.09	1.09	1.09	1.09
	40	2.85	2.67	2.38	2.11	1.92	1.92	1.92	1.92	1.92	1.92
	43	2.98	2.54	2.29	2.06	1.89	1.89	1.89	1.89	1.89	1.89

COP		Load (%)									
		100	90	80	70	60	50	40	30	20	10
TO (°C)	20	4.14	4.41	4.46	4.47	4.42	4.30	4.06	3.86	3.86	3.86
	27	3.46	3.51	3.61	3.68	3.71	3.66	3.57	3.57	3.57	3.57
	30	3.21	3.27	3.37	3.44	3.47	3.42	3.33	3.33	3.33	3.33
	35	2.83	2.95	3.05	3.11	3.13	3.07	2.98	2.98	2.98	2.98
	40	2.04	1.96	1.95	1.92	1.89	1.89	1.89	1.89	1.89	1.89
	43	1.62	1.71	1.69	1.64	1.59	1.59	1.59	1.59	1.59	1.59

* Cooling capacity and power input at 100% load are shown at maximum compressor operating frequency.
* Power input does not include water pump power.
* Cooling capacity and power input at 100% load are measured in accordance with EN14511.

TO : Outdoor temperature (DB°C)
LWT : Leaving water temperature (°C)

Specifications part load cooling capacity and input LWT (°C) =13°C

Outdoor unit HWT-801H8(R)W-E

Capacity (kW)		Load (%)									
		100	90	80	70	60	50	40	30	20	10
TO (°C)	20	9.41	8.47	7.53	6.59	5.65	4.71	3.76	2.82	2.22	2.22
	27	9.63	8.66	7.70	6.74	5.78	4.81	4.21	4.21	4.21	4.21
	30	9.27	8.34	7.42	6.49	5.56	4.64	4.06	4.06	4.06	4.06
	35	8.68	7.81	6.94	6.08	5.21	4.34	3.80	3.80	3.80	3.80
	40	7.97	7.17	6.37	5.58	4.98	4.98	4.98	4.98	4.98	4.98
	43	7.54	6.79	6.03	5.28	4.71	4.71	4.71	4.71	4.71	4.71

Power input (kW)		Load (%)									
		100	90	80	70	60	50	40	30	20	10
TO (°C)	20	1.85	1.62	1.40	1.19	1.00	0.82	0.66	0.51	0.42	0.42
	27	2.37	2.15	1.84	1.55	1.29	1.06	0.92	0.92	0.92	0.92
	30	2.50	2.23	1.91	1.62	1.35	1.10	0.97	0.97	0.97	0.97
	35	2.72	2.34	2.00	1.70	1.42	1.17	1.03	1.03	1.03	1.03
	40	3.00	2.67	2.29	1.95	1.72	1.72	1.72	1.72	1.72	1.72
	43	3.16	2.71	2.33	2.00	1.78	1.78	1.78	1.78	1.78	1.78

COP		Load (%)									
		100	90	80	70	60	50	40	30	20	10
TO (°C)	20	5.09	5.22	5.38	5.52	5.65	5.74	5.74	5.57	5.31	5.31
	27	4.07	4.04	4.19	4.34	4.47	4.56	4.57	4.57	4.57	4.57
	30	3.71	3.74	3.88	4.01	4.13	4.20	4.20	4.20	4.20	4.20
	35	3.19	3.35	3.47	3.58	3.67	3.71	3.69	3.69	3.69	3.69
	40	2.66	2.69	2.79	2.86	2.89	2.89	2.89	2.89	2.89	2.89
	43	2.39	2.51	2.59	2.64	2.65	2.65	2.65	2.65	2.65	2.65

* Cooling capacity and power input at 100% load are shown at maximum compressor operating frequency.
* Power input does not include water pump power.
* Cooling capacity and power input at 100% load are measured in accordance with EN14511.

TO : Outdoor temperature (DB°C)
LWT : Leaving water temperature (°C)

Specifications part load cooling capacity and input LWT (°C) =18°C

Outdoor unit HWT-801H8(R)W-E

Capacity (kW)		Load (%)									
		100	90	80	70	60	50	40	30	20	10
TO (°C)	20	10.58	9.52	8.46	7.41	6.35	5.29	4.23	3.17	2.50	2.50
	27	10.82	9.74	8.66	7.58	6.49	5.41	4.33	3.25	2.44	2.44
	30	10.43	9.38	8.34	7.30	6.26	5.21	4.17	3.13	2.48	2.48
	35	9.76	8.78	7.81	6.83	5.86	4.88	3.90	2.93	2.56	2.56
	40	9.12	8.20	7.29	6.38	5.70	5.70	5.70	5.70	5.70	5.70
	43	8.73	7.86	6.98	6.11	5.46	5.46	5.46	5.46	5.46	5.46

Power input (kW)		Load (%)									
		100	90	80	70	60	50	40	30	20	10
TO (°C)	20	1.84	1.61	1.37	1.15	0.95	0.77	0.62	0.48	0.40	0.40
	27	2.38	2.19	1.86	1.55	1.27	1.02	0.79	0.60	0.47	0.47
	30	2.53	2.29	1.94	1.62	1.33	1.07	0.83	0.62	0.51	0.51
	35	2.77	2.41	2.05	1.71	1.41	1.13	0.88	0.66	0.58	0.58
	40	3.05	2.68	2.30	1.96	1.73	1.73	1.73	1.73	1.73	1.73
	43	3.22	2.75	2.37	2.04	1.81	1.81	1.81	1.81	1.81	1.81

COP		Load (%)									
		100	90	80	70	60	50	40	30	20	10
TO (°C)	20	5.75	5.92	6.18	6.44	6.67	6.83	6.88	6.66	6.26	6.26
	27	4.54	4.45	4.67	4.89	5.11	5.31	5.45	5.42	5.19	5.19
	30	4.12	4.10	4.29	4.50	4.70	4.89	5.01	5.01	4.86	4.86
	35	3.52	3.64	3.81	3.99	4.16	4.33	4.44	4.44	4.39	4.39
	40	2.99	3.06	3.17	3.26	3.30	3.30	3.30	3.30	3.30	3.30
	43	2.71	2.86	2.94	3.00	3.02	3.02	3.02	3.02	3.02	3.02

* Cooling capacity and power input at 100% load are shown at maximum compressor operating frequency.
* Power input does not include water pump power.
* Cooling capacity and power input at 100% load are measured in accordance with EN14511.

TO : Outdoor temperature (DB°C)
LWT : Leaving water temperature (°C)

Specifications Low noise operation

Outdoor unit HWT-801H8(R)W-E

Capacity (kW)		LWT (°C)		
		7	13	18
TO (°C)	20	6.31	7.37	8.26
	27	5.91	6.83	7.59
	30	5.74	6.59	7.31
	35	5.45	6.20	6.83
	40	5.16	5.81	6.35

Power input (kW)		LWT (°C)		
		7	13	18
TO (°C)	20	1.53	1.43	1.35
	27	1.64	1.58	1.54
	30	1.68	1.65	1.62
	35	1.76	1.76	1.76
	40	1.84	1.87	1.90

COP		LWT (°C)		
		7	13	18
TO (°C)	20	4.12	5.15	6.12
	27	3.61	4.31	4.93
	30	3.41	3.99	4.50
	35	3.10	3.52	3.88
	40	2.81	3.11	3.35

* Power input does not include water pump power.
* Cooling capacity and power input are measured in accordance with EN14511.

TO : Outdoor temperature (DB°C)
LWT : Leaving water temperature (°C)

Specifications part load heating capacity and input (peak)LWT (°C) =35°C

Outdoor unit HWT-1101H8(R)W-E

Capacity (kW)		Load (%)									
		100	90	80	70	60	50	40	30	20	10
TO (°C)	-25	6.02	5.42	4.82	4.21	3.61	3.17	3.17	3.17	3.17	3.17
	-20	7.03	6.32	5.62	4.92	4.22	3.70	3.70	3.70	3.70	3.70
	-15	8.03	7.23	6.42	5.62	4.82	4.23	4.23	4.23	4.23	4.23
	-10	9.57	8.61	7.65	6.70	5.74	5.04	5.04	5.04	5.04	5.04
	-7	10.49	9.44	8.39	7.34	6.29	5.25	4.20	4.14	4.14	4.14
	-2	12.21	10.99	9.77	8.54	7.32	6.10	4.88	4.82	4.82	4.82
	2	13.58	12.22	10.86	9.51	8.15	6.79	5.43	5.24	5.24	5.24
	7	15.50	13.95	12.40	10.85	9.30	7.75	6.20	4.65	3.10	2.58
	10	16.17	14.55	12.94	11.32	9.70	8.09	6.47	4.85	3.23	2.70
	12	16.62	14.96	13.30	11.63	9.97	8.31	6.65	4.99	3.32	2.77
	15	17.29	15.56	13.83	12.10	10.37	8.65	6.92	5.19	3.46	2.88
	20	16.81	15.13	13.45	11.77	10.09	8.41	6.72	5.04	3.36	2.80

Power input (kW)		Load (%)									
		100	90	80	70	60	50	40	30	20	10
TO (°C)	-25	2.70	2.56	2.30	2.04	1.79	1.61	1.61	1.61	1.61	1.61
	-20	2.83	2.69	2.40	2.14	1.88	1.71	1.71	1.71	1.71	1.71
	-15	2.96	2.73	2.43	2.15	1.90	1.73	1.73	1.73	1.73	1.73
	-10	3.13	2.95	2.59	2.26	1.96	1.76	1.76	1.76	1.76	1.76
	-7	3.23	3.02	2.65	2.31	1.98	1.68	1.41	1.39	1.39	1.39
	-2	3.42	3.15	2.75	2.36	2.01	1.68	1.38	1.36	1.36	1.36
	2	3.57	3.19	2.76	2.36	1.98	1.64	1.33	1.29	1.29	1.29
	7	3.66	3.16	2.70	2.27	1.89	1.54	1.23	0.95	0.72	0.65
	10	3.63	3.06	2.60	2.19	1.81	1.47	1.16	0.90	0.67	0.61
	12	3.60	2.98	2.53	2.12	1.75	1.41	1.12	0.86	0.64	0.58
	15	3.57	3.18	2.69	2.24	1.83	1.46	1.14	0.85	0.61	0.54
	20	3.72	3.10	2.61	2.17	1.76	1.39	1.06	0.77	0.52	0.45

COP		Load (%)									
		100	90	80	70	60	50	40	30	20	10
TO (°C)	-25	2.23	2.11	2.10	2.07	2.02	1.97	1.97	1.97	1.97	1.97
	-20	2.48	2.35	2.34	2.30	2.24	2.16	2.16	2.16	2.16	2.16
	-15	2.71	2.65	2.64	2.61	2.53	2.44	2.44	2.44	2.44	2.44
	-10	3.06	2.92	2.95	2.96	2.93	2.87	2.87	2.87	2.87	2.87
	-7	3.25	3.13	3.16	3.18	3.17	3.11	2.98	2.97	2.97	2.97
	-2	3.57	3.48	3.56	3.62	3.65	3.64	3.55	3.54	3.54	3.54
	2	3.80	3.84	3.94	4.04	4.11	4.14	4.09	4.08	4.08	4.08
	7	4.23	4.42	4.60	4.77	4.93	5.04	5.05	4.88	4.33	4.00
	10	4.46	4.76	4.97	5.18	5.37	5.51	5.56	5.40	4.81	4.45
	12	4.61	5.02	5.25	5.49	5.71	5.88	5.95	5.80	5.18	4.80
	15	4.84	4.89	5.14	5.40	5.66	5.90	6.07	6.07	5.66	5.34
	20	4.52	4.89	5.15	5.43	5.72	6.03	6.32	6.52	6.46	6.30

* Heating capacity and power input are maximum (peak) value during operation.
* Heating capacity and power input at 100% load are shown at maximum compressor operating frequency.
* Power input does not include water pump power.
* Heating capacity and power input are measured in accordance with EN14511.

TO : Outdoor temperature (DB°C)
LWT : Leaving water temperature (°C)

Specifications part load heating capacity and input (peak)LWT (°C) =45°C

Outdoor unit HWT-1101H8(R)W-E

Capacity (kW)		Load (%)									
		100	90	80	70	60	50	40	30	20	10
TO (°C)	-25	5.79	5.21	4.63	4.05	3.47	3.04	3.04	3.04	3.04	3.04
	-20	6.85	6.16	5.48	4.79	4.11	3.60	3.60	3.60	3.60	3.60
	-15	7.91	7.11	6.32	5.53	4.74	4.16	4.16	4.16	4.16	4.16
	-10	9.42	8.48	7.54	6.59	5.65	4.96	4.96	4.96	4.96	4.96
	-7	10.33	9.30	8.26	7.23	6.20	5.17	4.13	4.08	4.08	4.08
	-2	11.94	10.74	9.55	8.35	7.16	5.97	4.77	4.71	4.71	4.71
	2	13.22	11.90	10.58	9.25	7.93	6.61	5.29	5.22	5.22	5.22
	7	15.24	13.71	12.19	10.66	9.14	7.62	6.09	5.88	5.88	5.88
	10	15.89	14.30	12.71	11.12	9.53	7.94	6.35	6.13	6.13	6.13
	12	16.32	14.69	13.06	11.42	9.79	8.16	6.53	6.30	6.30	6.30
	15	16.97	15.27	13.58	11.88	10.18	8.49	6.79	6.55	6.55	6.55
	20	16.68	15.01	13.34	11.68	10.01	8.34	6.67	6.44	6.44	6.44

Power input (kW)		Load (%)									
		100	90	80	70	60	50	40	30	20	10
TO (°C)	-25	3.24	2.96	2.67	2.36	2.06	1.83	1.83	1.83	1.83	1.83
	-20	3.38	3.11	2.80	2.49	2.19	1.96	1.96	1.96	1.96	1.96
	-15	3.52	3.19	2.85	2.53	2.22	2.00	2.00	2.00	2.00	2.00
	-10	3.75	3.44	3.05	2.69	2.35	2.12	2.12	2.12	2.12	2.12
	-7	3.89	3.54	3.12	2.74	2.39	2.07	1.79	1.78	1.78	1.78
	-2	4.02	3.69	3.24	2.81	2.41	2.03	1.69	1.67	1.67	1.67
	2	4.12	3.68	3.24	2.81	2.40	2.00	1.61	1.59	1.59	1.59
	7	4.28	3.82	3.32	2.85	2.41	1.99	1.60	1.55	1.55	1.55
	10	4.27	3.75	3.25	2.78	2.32	1.90	1.49	1.44	1.44	1.44
	12	4.27	3.69	3.19	2.72	2.26	1.83	1.42	1.36	1.36	1.36
	15	4.27	3.85	3.31	2.80	2.31	1.86	1.43	1.37	1.37	1.37
	20	4.36	3.73	3.17	2.65	2.16	1.72	1.32	1.26	1.26	1.26

COP		Load (%)									
		100	90	80	70	60	50	40	30	20	10
TO (°C)	-25	1.79	1.76	1.74	1.71	1.69	1.67	1.67	1.67	1.67	1.67
	-20	2.03	1.98	1.95	1.92	1.88	1.83	1.83	1.83	1.83	1.83
	-15	2.25	2.23	2.22	2.19	2.14	2.08	2.08	2.08	2.08	2.08
	-10	2.51	2.47	2.47	2.45	2.40	2.34	2.34	2.34	2.34	2.34
	-7	2.66	2.62	2.65	2.64	2.59	2.49	2.30	2.29	2.29	2.29
	-2	2.97	2.91	2.95	2.97	2.97	2.93	2.83	2.82	2.82	2.82
	2	3.21	3.23	3.26	3.29	3.30	3.30	3.28	3.28	3.28	3.28
	7	3.56	3.59	3.67	3.74	3.79	3.82	3.80	3.79	3.79	3.79
	10	3.72	3.82	3.91	4.01	4.10	4.19	4.26	4.27	4.27	4.27
	12	3.82	3.98	4.09	4.20	4.32	4.46	4.61	4.64	4.64	4.64
	15	3.98	3.97	4.10	4.25	4.41	4.57	4.75	4.78	4.78	4.78
	20	3.83	4.03	4.21	4.41	4.63	4.85	5.07	5.09	5.09	5.09

* Heating capacity and power input are maximum (peak) value during operation.
* Heating capacity and power input at 100% load are shown at maximum compressor operating frequency.
* Power input does not include water pump power.
* Heating capacity and power input are measured in accordance with EN14511.

TO : Outdoor temperature (DB°C)
LWT : Leaving water temperature (°C)

Specifications part load heating capacity and input (peak)LWT (°C) =55°C

Outdoor unit HWT-1101H8(R)W-E

Capacity (kW)		Load (%)									
		100	90	80	70	60	50	40	30	20	10
TO (°C)	-25	5.55	5.00	4.70	4.70	4.70	4.70	4.70	4.70	4.70	4.70
	-20	6.67	6.00	5.33	4.67	4.00	3.51	3.51	3.51	3.51	3.51
	-15	7.78	7.00	6.22	5.45	4.67	4.09	4.09	4.09	4.09	4.09
	-10	9.27	8.35	7.42	6.49	5.56	4.88	4.88	4.88	4.88	4.88
	-7	10.17	9.15	8.14	7.12	6.10	5.09	4.07	4.01	4.01	4.01
	-2	11.66	10.50	9.33	8.17	7.00	5.83	4.67	4.60	4.60	4.60
	2	12.86	11.57	10.29	9.00	7.72	6.43	5.14	5.08	5.08	5.08
	7	14.97	13.47	11.98	10.48	8.98	7.49	5.99	5.78	5.78	5.78
	10	15.60	14.04	12.48	10.92	9.36	7.80	6.24	6.02	6.02	6.02
	12	16.02	14.42	12.82	11.21	9.61	8.01	6.41	6.18	6.18	6.18
	15	16.65	14.99	13.32	11.66	9.99	8.33	6.66	6.43	6.43	6.43
	20	16.55	14.90	13.24	11.59	9.93	8.28	6.62	6.39	6.39	6.39

Power input (kW)		Load (%)									
		100	90	80	70	60	50	40	30	20	10
TO (°C)	-25	3.77	3.32	3.17	3.17	3.17	3.17	3.17	3.17	3.17	3.17
	-20	3.93	3.54	3.19	2.86	2.53	2.31	2.31	2.31	2.31	2.31
	-15	4.08	3.71	3.31	2.93	2.56	2.31	2.31	2.31	2.31	2.31
	-10	4.37	4.02	3.58	3.16	2.77	2.49	2.49	2.49	2.49	2.49
	-7	4.54	4.12	3.67	3.24	2.84	2.46	2.12	2.10	2.10	2.10
	-2	4.61	4.22	3.75	3.30	2.87	2.47	2.09	2.07	2.07	2.07
	2	4.67	4.18	3.71	3.27	2.84	2.43	2.05	2.03	2.03	2.03
	7	4.90	4.37	3.86	3.36	2.89	2.44	2.00	1.94	1.94	1.94
	10	4.92	4.27	3.75	3.26	2.79	2.35	1.94	1.88	1.88	1.88
	12	4.94	4.20	3.67	3.18	2.72	2.29	1.88	1.83	1.83	1.83
	15	4.96	4.37	3.79	3.25	2.76	2.30	1.89	1.83	1.83	1.83
	20	5.00	4.30	3.69	3.14	2.63	2.18	1.79	1.74	1.74	1.74

COP		Load (%)									
		100	90	80	70	60	50	40	30	20	10
TO (°C)	-25	1.47	1.50	1.48	1.48	1.48	1.48	1.48	1.48	1.48	1.48
	-20	1.70	1.70	1.67	1.63	1.58	1.52	1.52	1.52	1.52	1.52
	-15	1.91	1.89	1.88	1.86	1.82	1.78	1.78	1.78	1.78	1.78
	-10	2.12	2.08	2.08	2.06	2.01	1.96	1.96	1.96	1.96	1.96
	-7	2.24	2.22	2.22	2.20	2.15	2.06	1.92	1.91	1.91	1.91
	-2	2.53	2.48	2.49	2.48	2.44	2.36	2.23	2.22	2.22	2.22
	2	2.75	2.77	2.77	2.75	2.71	2.64	2.51	2.50	2.50	2.50
	7	3.06	3.08	3.11	3.12	3.11	3.07	2.99	2.97	2.97	2.97
	10	3.17	3.29	3.33	3.35	3.35	3.32	3.22	3.20	3.20	3.20
	12	3.24	3.44	3.49	3.53	3.54	3.50	3.40	3.38	3.38	3.38
	15	3.36	3.43	3.51	3.58	3.62	3.61	3.52	3.50	3.50	3.50
	20	3.31	3.46	3.59	3.69	3.77	3.79	3.70	3.68	3.68	3.68

* Heating capacity and power input are maximum (peak) value during operation.
* Heating capacity and power input at 100% load are shown at maximum compressor operating frequency.
* Power input does not include water pump power.
* Heating capacity and power input are measured in accordance with EN14511.

TO : Outdoor temperature (DB°C)
LWT : Leaving water temperature (°C)

Specifications Low noise operation

Outdoor unit HWT-1101H8(R)W-E

Capacity (kW)		LWT (°C)		
		35	45	55
TO (°C)	-25	2.94	2.88	—
	-20	3.58	3.53	3.48
	-15	4.21	4.17	4.12
	-10	5.00	4.88	4.76
	-7	5.47	5.31	5.15
	-2	6.41	6.22	6.03
	2	7.17	6.96	6.74
	7	8.14	7.92	7.69
	10	8.56	8.36	8.16
	12	8.84	8.65	8.47
	15	9.25	9.10	8.94
	20	9.95	9.84	9.72

Power input (kW)		LWT (°C)		
		35	45	55
TO (°C)	-25	1.43	1.67	—
	-20	1.54	1.86	2.19
	-15	1.64	1.94	2.24
	-10	1.68	1.99	2.29
	-7	1.71	2.02	2.32
	-2	1.75	2.08	2.41
	2	1.78	2.13	2.48
	7	1.78	2.14	2.50
	10	1.78	2.16	2.53
	12	1.78	2.17	2.55
	15	1.77	2.18	2.59
	20	1.77	2.21	2.64

COP		LWT (°C)		
		35	45	55
TO (°C)	-25	2.06	1.72	—
	-20	2.33	1.89	1.59
	-15	2.57	2.15	1.84
	-10	2.97	2.46	2.08
	-7	3.20	2.64	2.22
	-2	3.67	2.99	2.50
	2	4.03	3.27	2.72
	7	4.57	3.70	3.08
	10	4.81	3.88	3.22
	12	4.97	4.00	3.32
	15	5.22	4.17	3.46
	20	5.62	4.46	3.68

* Power input does not include water pump power.
* Heating capacity and power input at 100% load are measured in accordance with EN14511.

TO : Outdoor temperature (DB°C)
LWT : Leaving water temperature (°C)

Specifications part load cooling capacity and input LWT (°C) =7°C

Outdoor unit HWT-1101H8(R)W-E

Capacity (kW)		Load (%)									
		100	90	80	70	60	50	40	30	20	10
TO (°C)	20	9.40	8.46	7.52	6.58	5.64	4.70	3.76	2.82	2.73	2.73
	27	9.68	8.71	7.75	6.78	5.81	4.84	3.87	3.53	3.53	3.53
	30	9.35	8.42	7.48	6.55	5.61	4.68	3.74	3.41	3.41	3.41
	35	8.81	7.93	7.05	6.17	5.29	4.41	3.52	3.21	3.21	3.21
	40	6.90	6.21	5.52	4.83	4.14	3.59	3.59	3.59	3.59	3.59
	43	5.75	5.18	4.60	4.03	3.45	2.99	2.99	2.99	2.99	2.99

Power input (kW)		Load (%)									
		100	90	80	70	60	50	40	30	20	10
TO (°C)	20	2.33	1.96	1.71	1.48	1.26	1.07	0.89	0.73	0.71	0.71
	27	2.92	2.61	2.23	1.89	1.58	1.31	1.07	0.99	0.99	0.99
	30	3.06	2.73	2.32	1.96	1.63	1.35	1.11	1.03	1.03	1.03
	35	3.29	2.86	2.43	2.04	1.70	1.41	1.16	1.08	1.08	1.08
	40	3.50	3.20	2.82	2.47	2.15	1.91	1.91	1.91	1.91	1.91
	43	3.62	2.99	2.67	2.37	2.09	1.88	1.88	1.88	1.88	1.88

COP		Load (%)									
		100	90	80	70	60	50	40	30	20	10
TO (°C)	20	4.03	4.31	4.40	4.45	4.47	4.41	4.23	3.87	3.83	3.83
	27	3.32	3.33	3.47	3.59	3.68	3.71	3.62	3.55	3.55	3.55
	30	3.06	3.09	3.22	3.34	3.43	3.46	3.38	3.31	3.31	3.31
	35	2.68	2.78	2.91	3.02	3.11	3.13	3.04	2.97	2.97	2.97
	40	1.97	1.94	1.96	1.95	1.93	1.88	1.88	1.88	1.88	1.88
	43	1.59	1.73	1.72	1.70	1.65	1.59	1.59	1.59	1.59	1.59

* Cooling capacity and power input at 100% load are shown at maximum compressor operating frequency.
* Power input does not include water pump power.
* Cooling capacity and power input at 100% load are measured in accordance with EN14511.

TO : Outdoor temperature (DB°C)
LWT : Leaving water temperature (°C)

Specifications part load cooling capacity and input LWT (°C) =13°C

Outdoor unit HWT-1101H8(R)W-E

Capacity (kW)		Load (%)									
		100	90	80	70	60	50	40	30	20	10
TO (°C)	20	10.94	9.85	8.75	7.66	6.56	5.47	4.38	3.28	2.19	2.16
	27	11.28	10.15	9.02	7.90	6.77	5.64	4.51	4.11	4.11	4.11
	30	10.91	9.81	8.72	7.63	6.54	5.45	4.36	3.98	3.98	3.98
	35	10.28	9.25	8.22	7.20	6.17	5.14	4.11	3.75	3.75	3.75
	40	9.22	8.30	7.37	6.45	5.53	4.80	4.80	4.80	4.80	4.80
	43	8.58	7.72	6.86	6.01	5.15	4.47	4.47	4.47	4.47	4.47

Power input (kW)		Load (%)									
		100	90	80	70	60	50	40	30	20	10
TO (°C)	20	2.36	1.98	1.69	1.43	1.19	0.96	0.76	0.58	0.41	0.41
	27	2.99	2.67	2.27	1.90	1.56	1.26	0.99	0.90	0.90	0.90
	30	3.15	2.80	2.37	1.98	1.63	1.32	1.04	0.95	0.95	0.95
	35	3.42	2.95	2.50	2.10	1.73	1.40	1.11	1.02	1.02	1.02
	40	3.70	3.27	2.77	2.32	1.93	1.66	1.66	1.66	1.66	1.66
	43	3.87	3.23	2.75	2.32	1.95	1.69	1.69	1.69	1.69	1.69

COP		Load (%)									
		100	90	80	70	60	50	40	30	20	10
TO (°C)	20	4.64	4.98	5.17	5.35	5.53	5.67	5.75	5.68	5.29	5.27
	27	3.77	3.80	3.98	4.16	4.34	4.48	4.57	4.57	4.57	4.57
	30	3.46	3.51	3.68	3.85	4.01	4.14	4.20	4.20	4.20	4.20
	35	3.01	3.14	3.29	3.43	3.57	3.67	3.70	3.68	3.68	3.68
	40	2.49	2.53	2.66	2.78	2.87	2.89	2.89	2.89	2.89	2.89
	43	2.22	2.39	2.50	2.59	2.64	2.64	2.64	2.64	2.64	2.64

* Cooling capacity and power input at 100% load are shown at maximum compressor operating frequency.
* Power input does not include water pump power.
* Cooling capacity and power input at 100% load are measured in accordance with EN14511.

TO : Outdoor temperature (DB°C)
LWT : Leaving water temperature (°C)

Specifications part load cooling capacity and input LWT (°C) =18°C

Outdoor unit HWT-1101H8(R)W-E

Capacity (kW)		Load (%)									
		100	90	80	70	60	50	40	30	20	10
TO (°C)	20	12.32	11.09	9.86	8.62	7.39	6.16	4.93	3.70	2.46	2.44
	27	12.65	11.39	10.12	8.86	7.59	6.33	5.06	3.80	2.53	2.37
	30	12.21	10.99	9.77	8.55	7.33	6.10	4.88	3.66	2.44	2.42
	35	11.47	10.32	9.18	8.03	6.88	5.74	4.59	3.44	2.51	2.51
	40	10.70	9.63	8.56	7.49	6.42	5.57	5.57	5.57	5.57	5.57
	43	10.23	9.21	8.18	7.16	6.14	5.33	5.33	5.33	5.33	5.33

Power input (kW)		Load (%)									
		100	90	80	70	60	50	40	30	20	10
TO (°C)	20	2.28	2.00	1.69	1.40	1.15	0.92	0.72	0.54	0.40	0.39
	27	2.99	2.75	2.31	1.92	1.55	1.23	0.94	0.69	0.48	0.46
	30	3.19	2.88	2.43	2.01	1.63	1.29	0.99	0.73	0.50	0.50
	35	3.52	3.04	2.57	2.13	1.73	1.37	1.05	0.77	0.57	0.57
	40	3.81	3.35	2.84	2.38	1.97	1.69	1.69	1.69	1.69	1.69
	43	3.99	3.41	2.90	2.45	2.05	1.77	1.77	1.77	1.77	1.77

COP		Load (%)									
		100	90	80	70	60	50	40	30	20	10
TO (°C)	20	5.40	5.55	5.84	6.14	6.44	6.70	6.87	6.81	6.24	6.21
	27	4.23	4.14	4.37	4.63	4.89	5.15	5.37	5.46	5.23	5.15
	30	3.83	3.81	4.02	4.25	4.49	4.73	4.93	5.03	4.84	4.83
	35	3.26	3.39	3.58	3.77	3.98	4.19	4.37	4.46	4.38	4.38
	40	2.80	2.88	3.02	3.15	3.25	3.30	3.30	3.30	3.30	3.30
	43	2.56	2.70	2.82	2.93	3.00	3.01	3.01	3.01	3.01	3.01

* Cooling capacity and power input at 100% load are shown at maximum compressor operating frequency.
* Power input does not include water pump power.
* Cooling capacity and power input at 100% load are measured in accordance with EN14511.

TO : Outdoor temperature (DB°C)
LWT : Leaving water temperature (°C)

Specifications Low noise operation

Outdoor unit HWT-1101H8(R)W-E

Capacity (kW)		LWT (°C)		
		7	13	18
TO (°C)	20	7.18	8.22	9.08
	27	6.62	7.59	8.40
	30	6.39	7.32	8.11
	35	5.99	6.88	7.62
	40	5.59	6.43	7.13

Power input (kW)		LWT (°C)		
		7	13	18
TO (°C)	20	1.59	1.56	1.53
	27	1.77	1.76	1.75
	30	1.85	1.85	1.85
	35	1.98	2.00	2.01
	40	2.11	2.14	2.17

COP		LWT (°C)		
		7	13	18
TO (°C)	20	4.52	5.28	5.93
	27	3.74	4.31	4.79
	30	3.45	3.96	4.38
	35	3.03	3.45	3.79
	40	2.65	3.00	3.29

* Power input does not include water pump power.
* Cooling capacity and power input are measured in accordance with EN14511.

TO : Outdoor temperature (DB°C)
LWT : Leaving water temperature (°C)

Specifications part load heating capacity and input (peak)LWT (°C) =35°C

Outdoor unit HWT-1401H8(R)W-E

Capacity (kW)		Load (%)									
		100	90	80	70	60	50	40	30	20	10
TO (°C)	-25	7.67	6.90	6.14	5.37	4.60	3.84	3.36	3.36	3.36	3.36
	-20	8.88	7.99	7.10	6.21	5.33	4.44	3.89	3.89	3.89	3.89
	-15	10.08	9.07	8.06	7.06	6.05	5.04	4.41	4.41	4.41	4.41
	-10	11.94	10.74	9.55	8.36	7.16	5.97	5.23	5.23	5.23	5.23
	-7	13.05	11.75	10.44	9.14	7.83	6.53	5.22	4.29	4.29	4.29
	-2	14.89	13.40	11.91	10.42	8.93	7.45	5.96	4.89	4.89	4.89
	2	16.13	14.52	12.90	11.29	9.68	8.07	6.45	5.18	5.18	5.18
	7	18.39	16.55	14.71	12.87	11.03	9.20	7.36	5.52	3.68	2.55
	10	19.57	17.61	15.65	13.70	11.74	9.78	7.83	5.87	3.91	2.71
	12	20.35	18.32	16.28	14.25	12.21	10.18	8.14	6.11	4.07	2.82
	15	20.35	18.32	16.28	14.25	12.21	10.18	8.14	6.11	4.07	2.82
	20	20.35	18.32	16.28	14.25	12.21	10.18	8.14	6.11	4.07	2.82

Power input (kW)		Load (%)									
		100	90	80	70	60	50	40	30	20	10
TO (°C)	-25	3.70	3.27	2.90	2.54	2.20	1.88	1.69	1.69	1.69	1.69
	-20	3.88	3.43	3.02	2.64	2.29	1.96	1.77	1.77	1.77	1.77
	-15	4.05	3.52	3.07	2.67	2.30	1.97	1.79	1.79	1.79	1.79
	-10	4.35	3.83	3.32	2.85	2.42	2.03	1.81	1.81	1.81	1.81
	-7	4.53	3.91	3.39	2.91	2.46	2.05	1.68	1.43	1.43	1.43
	-2	4.69	4.04	3.48	2.96	2.48	2.04	1.64	1.38	1.38	1.38
	2	4.62	3.98	3.41	2.89	2.40	1.96	1.56	1.27	1.27	1.27
	7	4.73	4.02	3.40	2.83	2.32	1.86	1.46	1.10	0.80	0.64
	10	4.71	4.03	3.39	2.81	2.29	1.83	1.42	1.06	0.76	0.61
	12	4.69	4.01	3.37	2.78	2.26	1.79	1.38	1.03	0.73	0.58
	15	4.64	4.05	3.40	2.80	2.27	1.79	1.37	1.00	0.69	0.53
	20	4.55	4.12	3.45	2.84	2.28	1.78	1.34	0.95	0.62	0.45

COP		Load (%)									
		100	90	80	70	60	50	40	30	20	10
TO (°C)	-25	2.07	2.11	2.12	2.11	2.09	2.04	1.99	1.99	1.99	1.99
	-20	2.29	2.33	2.35	2.35	2.33	2.26	2.19	2.19	2.19	2.19
	-15	2.49	2.58	2.62	2.65	2.63	2.56	2.47	2.47	2.47	2.47
	-10	2.74	2.81	2.88	2.93	2.96	2.94	2.89	2.89	2.89	2.89
	-7	2.88	3.00	3.08	3.14	3.18	3.18	3.11	3.00	3.00	3.00
	-2	3.17	3.31	3.42	3.52	3.60	3.65	3.63	3.55	3.55	3.55
	2	3.49	3.65	3.78	3.91	4.03	4.11	4.14	4.07	4.07	4.07
	7	3.89	4.12	4.33	4.54	4.75	4.94	5.05	5.01	4.60	3.98
	10	4.16	4.37	4.61	4.87	5.12	5.36	5.53	5.53	5.13	4.47
	12	4.34	4.57	4.84	5.12	5.41	5.68	5.90	5.93	5.54	4.84
	15	4.39	4.52	4.79	5.08	5.39	5.69	5.96	6.10	5.88	5.30
	20	4.47	4.45	4.72	5.02	5.35	5.71	6.08	6.41	6.54	6.30

* Heating capacity and power input are maximum (peak) value during operation.
* Heating capacity and power input at 100% load are shown at maximum compressor operating frequency.
* Power input does not include water pump power.
* Heating capacity and power input are measured in accordance with EN14511.

TO : Outdoor temperature (DB°C)
LWT : Leaving water temperature (°C)

Specifications part load heating capacity and input (peak)LWT (°C) =45°C

Outdoor unit HWT-1401H8(R)W-E

Capacity (kW)		Load (%)									
		100	90	80	70	60	50	40	30	20	10
TO (°C)	-25	7.69	6.92	6.15	5.38	4.61	3.84	3.37	3.37	3.37	3.37
	-20	8.77	7.90	7.02	6.14	5.26	4.39	3.84	3.84	3.84	3.84
	-15	10.07	9.06	8.05	7.05	6.04	5.03	4.41	4.41	4.41	4.41
	-10	11.86	10.67	9.48	8.30	7.11	5.93	5.19	5.19	5.19	5.19
	-7	12.93	11.64	10.34	9.05	7.76	6.47	5.17	4.25	4.25	4.25
	-2	14.68	13.21	11.74	10.28	8.81	7.34	5.87	4.82	4.82	4.82
	2	16.17	14.55	12.93	11.32	9.70	8.08	6.47	5.31	5.31	5.31
	7	18.14	16.33	14.51	12.70	10.88	9.07	7.26	5.83	5.83	5.83
	10	19.34	17.41	15.47	13.54	11.60	9.67	7.74	6.21	6.21	6.21
	12	20.14	18.13	16.11	14.10	12.08	10.07	8.06	6.47	6.47	6.47
	15	19.83	17.85	15.87	13.88	11.90	9.92	7.93	6.37	6.37	6.37
	20	19.33	17.39	15.46	13.53	11.60	9.66	7.73	6.47	6.47	6.47

Power input (kW)		Load (%)									
		100	90	80	70	60	50	40	30	20	10
TO (°C)	-25	4.20	3.82	3.44	3.05	2.66	2.26	2.00	2.00	2.00	2.00
	-20	4.37	3.92	3.51	3.11	2.71	2.31	2.07	2.07	2.07	2.07
	-15	4.60	4.10	3.62	3.16	2.73	2.33	2.09	2.09	2.09	2.09
	-10	4.88	4.45	3.88	3.36	2.88	2.45	2.20	2.20	2.20	2.20
	-7	5.05	4.62	4.00	3.44	2.93	2.48	2.08	1.82	1.82	1.82
	-2	5.23	4.72	4.09	3.51	2.97	2.47	2.01	1.70	1.70	1.70
	2	5.36	4.60	4.03	3.49	2.96	2.45	1.96	1.62	1.62	1.62
	7	5.46	4.73	4.09	3.48	2.92	2.39	1.90	1.54	1.54	1.54
	10	5.47	4.79	4.13	3.51	2.92	2.36	1.84	1.46	1.46	1.46
	12	5.47	4.80	4.14	3.51	2.91	2.34	1.80	1.40	1.40	1.40
	15	5.32	4.73	4.05	3.41	2.80	2.24	1.71	1.33	1.33	1.33
	20	5.08	4.60	3.89	3.23	2.62	2.07	1.57	1.27	1.27	1.27

COP		Load (%)									
		100	90	80	70	60	50	40	30	20	10
TO (°C)	-25	1.83	1.81	1.79	1.76	1.73	1.70	1.68	1.68	1.68	1.68
	-20	2.01	2.01	2.00	1.98	1.94	1.90	1.86	1.86	1.86	1.86
	-15	2.19	2.21	2.22	2.23	2.21	2.16	2.11	2.11	2.11	2.11
	-10	2.43	2.40	2.44	2.47	2.47	2.42	2.36	2.36	2.36	2.36
	-7	2.56	2.52	2.58	2.63	2.65	2.61	2.49	2.33	2.33	2.33
	-2	2.81	2.80	2.87	2.93	2.97	2.97	2.93	2.84	2.84	2.84
	2	3.02	3.16	3.21	3.25	3.28	3.30	3.30	3.28	3.28	3.28
	7	3.32	3.45	3.55	3.64	3.73	3.80	3.82	3.79	3.79	3.79
	10	3.54	3.64	3.75	3.86	3.98	4.09	4.20	4.27	4.27	4.27
	12	3.68	3.78	3.90	4.02	4.15	4.30	4.47	4.62	4.62	4.62
	15	3.73	3.77	3.92	4.08	4.25	4.43	4.63	4.80	4.80	4.80
	20	3.81	3.78	3.98	4.19	4.42	4.67	4.93	5.09	5.09	5.09

* Heating capacity and power input are maximum (peak) value during operation.
* Heating capacity and power input at 100% load are shown at maximum compressor operating frequency.
* Power input does not include water pump power.
* Heating capacity and power input are measured in accordance with EN14511.

TO : Outdoor temperature (DB°C)
LWT : Leaving water temperature (°C)

Specifications part load heating capacity and input (peak)LWT (°C) =55°C

Outdoor unit HWT-1401H8(R)W-E

Capacity (kW)		Load (%)									
		100	90	80	70	60	50	40	30	20	10
TO (°C)	-25	7.70	6.93	6.16	5.39	4.70	4.70	4.70	4.70	4.70	4.70
	-20	8.67	7.80	6.94	6.07	5.20	4.34	3.80	3.80	3.80	3.80
	-15	10.05	9.05	8.04	7.04	6.03	5.03	4.40	4.40	4.40	4.40
	-10	11.78	10.60	9.42	8.24	7.07	5.89	5.16	5.16	5.16	5.16
	-7	12.81	11.53	10.25	8.97	7.69	6.41	5.12	4.21	4.21	4.21
	-2	14.47	13.02	11.58	10.13	8.68	7.24	5.79	4.75	4.75	4.75
	2	16.20	14.58	12.96	11.34	9.72	8.10	6.48	5.32	5.32	5.32
	7	17.89	16.10	14.31	12.52	10.73	8.95	7.16	5.75	5.75	5.75
	10	19.11	17.20	15.29	13.38	11.47	9.56	7.65	6.14	6.14	6.14
	12	19.93	17.94	15.94	13.95	11.96	9.97	7.97	6.40	6.40	6.40
	15	19.32	17.39	15.46	13.52	11.59	9.66	7.73	6.46	6.46	6.46
	20	18.30	16.47	14.64	12.81	10.98	9.15	7.32	6.39	6.39	6.39

Power input (kW)		Load (%)									
		100	90	80	70	60	50	40	30	20	10
TO (°C)	-25	4.69	4.42	3.97	3.54	3.17	3.17	3.17	3.17	3.17	3.17
	-20	4.87	4.54	4.05	3.57	3.12	2.69	2.44	2.44	2.44	2.44
	-15	5.14	4.85	4.27	3.73	3.21	2.73	2.44	2.44	2.44	2.44
	-10	5.40	5.19	4.56	3.97	3.41	2.90	2.60	2.60	2.60	2.60
	-7	5.56	5.30	4.65	4.04	3.47	2.95	2.48	2.17	2.17	2.17
	-2	5.77	5.34	4.69	4.07	3.49	2.95	2.45	2.12	2.12	2.12
	2	6.10	5.34	4.70	4.09	3.52	2.97	2.45	2.10	2.10	2.10
	7	6.19	5.32	4.67	4.04	3.45	2.88	2.34	1.94	1.94	1.94
	10	6.23	5.40	4.70	4.05	3.43	2.85	2.31	1.91	1.91	1.91
	12	6.25	5.45	4.72	4.04	3.41	2.82	2.28	1.88	1.88	1.88
	15	6.01	5.28	4.54	3.86	3.23	2.67	2.15	1.84	1.84	1.84
	20	5.60	4.94	4.21	3.54	2.95	2.41	1.95	1.74	1.74	1.74

COP		Load (%)									
		100	90	80	70	60	50	40	30	20	10
TO (°C)	-25	1.64	1.57	1.55	1.52	1.48	1.48	1.48	1.48	1.48	1.48
	-20	1.78	1.72	1.71	1.70	1.67	1.61	1.56	1.56	1.56	1.56
	-15	1.96	1.87	1.88	1.89	1.88	1.84	1.80	1.80	1.80	1.80
	-10	2.18	2.04	2.07	2.08	2.07	2.03	1.98	1.98	1.98	1.98
	-7	2.30	2.18	2.21	2.22	2.21	2.17	2.07	1.94	1.94	1.94
	-2	2.51	2.44	2.47	2.49	2.49	2.45	2.36	2.24	2.24	2.24
	2	2.66	2.73	2.76	2.77	2.77	2.73	2.64	2.53	2.53	2.53
	7	2.89	3.03	3.07	3.10	3.12	3.11	3.06	2.97	2.97	2.97
	10	3.07	3.19	3.25	3.31	3.35	3.35	3.31	3.21	3.21	3.21
	12	3.19	3.29	3.38	3.45	3.51	3.54	3.50	3.40	3.40	3.40
	15	3.22	3.30	3.40	3.50	3.58	3.62	3.59	3.51	3.51	3.51
	20	3.27	3.34	3.48	3.62	3.73	3.79	3.76	3.68	3.68	3.68

* Heating capacity and power input are maximum (peak) value during operation.
* Heating capacity and power input at 100% load are shown at maximum compressor operating frequency.
* Power input does not include water pump power.
* Heating capacity and power input are measured in accordance with EN14511.

TO : Outdoor temperature (DB°C)
LWT : Leaving water temperature (°C)

Specifications Low noise operation

Outdoor unit HWT-1401H8(R)W-E

Capacity (kW)		LWT (°C)		
		35	45	55
TO (°C)	-25	4.27	4.22	—
	-20	4.99	4.88	4.88
	-15	5.71	5.53	5.63
	-10	6.68	6.50	6.38
	-7	7.26	7.08	6.83
	-2	8.57	8.37	8.27
	2	9.61	9.40	9.42
	7	11.12	10.68	10.56
	10	12.02	11.63	11.51
	12	12.62	12.26	12.15
	15	12.85	12.53	12.45
	20	13.22	12.97	12.95

Power input (kW)		LWT (°C)		
		35	45	55
TO (°C)	-25	2.14	2.52	—
	-20	2.25	2.58	3.08
	-15	2.35	2.64	3.16
	-10	2.44	2.73	3.24
	-7	2.49	2.79	3.29
	-2	2.46	2.84	3.37
	2	2.44	2.88	3.44
	7	2.45	3.05	3.44
	10	2.43	3.03	3.53
	12	2.42	3.02	3.59
	15	2.42	3.02	3.59
	20	2.42	3.01	3.60

COP		LWT (°C)		
		35	45	55
TO (°C)	-25	2.00	1.67	—
	-20	2.22	1.89	1.59
	-15	2.43	2.09	1.78
	-10	2.74	2.38	1.97
	-7	2.92	2.54	2.08
	-2	3.48	2.95	2.45
	2	3.94	3.26	2.74
	7	4.54	3.50	3.07
	10	4.94	3.84	3.26
	12	5.21	4.06	3.38
	15	5.31	4.15	3.46
	20	5.46	4.31	3.60

* Power input does not include water pump power.
* Heating capacity and power input at 100% load are measured in accordance with EN14511.

TO : Outdoor temperature (DB°C)
LWT : Leaving water temperature (°C)

Specifications part load cooling capacity and input LWT (°C) =7°C

Outdoor unit HWT-1401H8(R)W-E

Capacity (kW)		Load (%)									
		100	90	80	70	60	50	40	30	20	10
TO (°C)	20	11.60	10.44	9.28	8.12	6.96	5.80	4.64	3.48	2.74	2.74
	27	11.11	9.99	8.88	7.77	6.66	5.55	4.44	3.33	3.29	3.29
	30	10.89	9.80	8.71	7.63	6.54	5.45	4.36	3.27	3.23	3.23
	35	10.54	9.49	8.43	7.38	6.32	5.27	4.22	3.16	3.13	3.13
	40	9.26	8.33	7.41	6.48	5.56	4.63	3.92	3.92	3.92	3.92
	43	8.49	7.64	6.79	5.94	5.09	4.25	3.60	3.60	3.60	3.60

Power input (kW)		Load (%)									
		100	90	80	70	60	50	40	30	20	10
TO (°C)	20	2.99	2.55	2.20	1.87	1.57	1.30	1.05	0.84	0.71	0.71
	27	3.65	3.17	2.68	2.24	1.85	1.50	1.20	0.95	0.94	0.94
	30	3.94	3.40	2.86	2.38	1.95	1.58	1.26	1.00	0.99	0.99
	35	4.41	3.73	3.12	2.58	2.11	1.70	1.35	1.07	1.06	1.06
	40	4.71	4.52	3.91	3.35	2.84	2.38	2.05	2.05	2.05	2.05
	43	4.89	4.56	3.98	3.44	2.94	2.48	2.16	2.16	2.16	2.16

COP		Load (%)									
		100	90	80	70	60	50	40	30	20	10
TO (°C)	20	3.88	4.09	4.22	4.34	4.43	4.47	4.40	4.15	3.83	3.83
	27	3.04	3.15	3.31	3.46	3.60	3.69	3.69	3.50	3.49	3.49
	30	2.77	2.88	3.04	3.20	3.35	3.45	3.45	3.28	3.26	3.26
	35	2.39	2.55	2.70	2.86	3.00	3.11	3.12	2.95	2.94	2.94
	40	1.97	1.84	1.89	1.93	1.95	1.95	1.91	1.91	1.91	1.91
	43	1.74	1.67	1.71	1.73	1.73	1.71	1.66	1.66	1.66	1.66

* Cooling capacity and power input at 100% load are shown at maximum compressor operating frequency.
* Power input does not include water pump power.
* Cooling capacity and power input at 100% load are measured in accordance with EN14511.

TO : Outdoor temperature (DB°C)
LWT : Leaving water temperature (°C)

Specifications part load cooling capacity and input LWT (°C) =13°C

Outdoor unit HWT-1401H8(R)W-E

Capacity (kW)		Load (%)									
		100	90	80	70	60	50	40	30	20	10
TO (°C)	20	13.44	12.10	10.75	9.41	8.06	6.72	5.38	4.03	2.69	2.16
	27	13.04	11.74	10.43	9.13	7.83	6.52	5.22	3.91	3.87	3.87
	30	12.87	11.59	10.30	9.01	7.72	6.44	5.15	3.86	3.82	3.82
	35	12.59	11.33	10.07	8.81	7.55	6.30	5.04	3.78	3.77	3.77
	40	11.35	10.22	9.08	7.95	6.81	5.68	4.94	4.94	4.94	4.94
	43	10.61	9.55	8.49	7.43	6.37	5.31	4.69	4.69	4.69	4.69

Power input (kW)		Load (%)									
		100	90	80	70	60	50	40	30	20	10
TO (°C)	20	3.01	2.62	2.22	1.86	1.53	1.22	0.95	0.70	0.49	0.41
	27	3.78	3.29	2.78	2.30	1.88	1.49	1.15	0.86	0.85	0.85
	30	4.12	3.56	3.00	2.48	2.02	1.60	1.24	0.92	0.91	0.91
	35	4.67	3.97	3.33	2.75	2.23	1.77	1.37	1.02	1.02	1.02
	40	4.81	4.50	3.75	3.08	2.49	1.99	1.71	1.71	1.71	1.71
	43	4.90	4.46	3.71	3.06	2.49	2.01	1.77	1.77	1.77	1.77

COP		Load (%)									
		100	90	80	70	60	50	40	30	20	10
TO (°C)	20	4.47	4.62	4.83	5.06	5.29	5.50	5.68	5.75	5.53	5.27
	27	3.45	3.56	3.76	3.96	4.17	4.37	4.53	4.56	4.56	4.56
	30	3.13	3.25	3.44	3.63	3.83	4.02	4.17	4.19	4.19	4.19
	35	2.70	2.85	3.02	3.20	3.38	3.55	3.68	3.69	3.69	3.69
	40	2.36	2.27	2.42	2.58	2.74	2.86	2.89	2.89	2.89	2.89
	43	2.17	2.14	2.29	2.43	2.55	2.64	2.65	2.65	2.65	2.65

* Cooling capacity and power input at 100% load are shown at maximum compressor operating frequency.
* Power input does not include water pump power.
* Cooling capacity and power input at 100% load are measured in accordance with EN14511.

TO : Outdoor temperature (DB°C)
LWT : Leaving water temperature (°C)

Specifications part load cooling capacity and input LWT (°C) =18°C

Outdoor unit HWT-1401H8(R)W-E

Capacity (kW)		Load (%)									
		100	90	80	70	60	50	40	30	20	10
TO (°C)	20	14.76	13.28	11.81	10.33	8.86	7.38	5.90	4.43	2.95	2.37
	27	14.24	12.81	11.39	9.97	8.54	7.12	5.69	4.27	2.85	2.17
	30	14.01	12.61	11.21	9.81	8.41	7.01	5.61	4.20	2.80	2.26
	35	13.64	12.28	10.91	9.55	8.18	6.82	5.46	4.09	2.73	2.47
	40	11.92	10.73	9.54	8.34	7.15	5.96	5.47	5.47	5.47	5.47
	43	10.89	9.80	8.71	7.62	6.53	5.45	5.34	5.34	5.34	5.34

Power input (kW)		Load (%)									
		100	90	80	70	60	50	40	30	20	10
TO (°C)	20	3.11	2.62	2.19	1.80	1.45	1.15	0.88	0.64	0.45	0.38
	27	3.84	3.29	2.75	2.26	1.82	1.43	1.08	0.78	0.53	0.43
	30	4.16	3.55	2.97	2.44	1.96	1.54	1.16	0.84	0.57	0.47
	35	4.68	3.95	3.31	2.72	2.18	1.71	1.29	0.92	0.62	0.57
	40	4.48	3.93	3.30	2.74	2.24	1.81	1.66	1.66	1.66	1.66
	43	4.36	3.73	3.16	2.65	2.20	1.81	1.77	1.77	1.77	1.77

COP		Load (%)									
		100	90	80	70	60	50	40	30	20	10
TO (°C)	20	4.75	5.08	5.39	5.73	6.09	6.44	6.75	6.88	6.56	6.16
	27	3.71	3.90	4.14	4.40	4.69	4.99	5.26	5.45	5.34	5.04
	30	3.37	3.55	3.77	4.02	4.28	4.56	4.82	5.01	4.95	4.77
	35	2.91	3.11	3.30	3.51	3.75	3.99	4.23	4.42	4.42	4.37
	40	2.66	2.73	2.89	3.04	3.19	3.29	3.30	3.30	3.30	3.30
	43	2.50	2.63	2.76	2.88	2.98	3.01	3.01	3.01	3.01	3.01

* Cooling capacity and power input at 100% load are shown at maximum compressor operating frequency.
* Power input does not include water pump power.
* Cooling capacity and power input at 100% load are measured in accordance with EN14511.

TO : Outdoor temperature (DB°C)
LWT : Leaving water temperature (°C)

Specifications Low noise operation

Outdoor unit HWT-1401H8(R)W-E

Capacity (kW)		LWT (°C)		
		7	13	18
TO (°C)	20	9.04	10.36	11.46
	27	8.26	9.54	10.60
	30	7.92	9.18	10.23
	35	7.36	8.59	9.62
	40	5.85	7.36	8.61

Power input (kW)		LWT (°C)		
		7	13	18
TO (°C)	20	1.83	1.86	1.88
	27	2.18	2.23	2.27
	30	2.32	2.39	2.44
	35	2.57	2.65	2.72
	40	2.78	2.90	3.00

COP		LWT (°C)		
		7	13	18
TO (°C)	20	4.94	5.58	6.10
	27	3.80	4.28	4.67
	30	3.41	3.85	4.19
	35	2.86	3.24	3.54
	40	2.11	2.54	2.87

* Power input does not include water pump power.
* Cooling capacity and power input are measured in accordance with EN14511.

TO : Outdoor temperature (DB°C)
LWT : Leaving water temperature (°C)

2-7. Sound Data

2-7-1. Sound Characteristics (NC Curve)

▼ HWT-601HWH(M3,T6)W-E
HWT-1101XWH(M3,T6,T9)W-E

- Maximum/Rated/Silent operation

Sound pressure level (dB(A))	Cooling	Heating
	29	29

△——△ Heating
○——○ Cooling

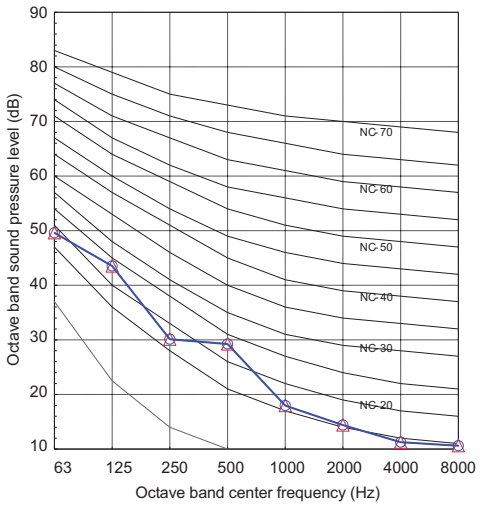

▼ HWT-1401XWH(M3,M6,T6,T9)W-E

- Maximum/Rated/Silent operation

Sound pressure level (dB(A))	Cooling	Heating
	35	35

△——△ Heating
○——○ Cooling

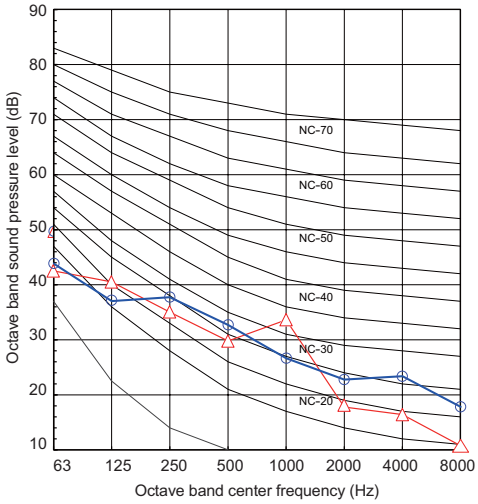

▼ HWT-602S21S(M)(M3,M6,T6)W-E
HWT-1102S21S(M)(M3,M6,T6,T9)W-E

Maximum operation (1 ZONE)

Sound pressure level (dB(A))	Cooling	Heating
	32	32

△——△ Heating
○——○ Cooling

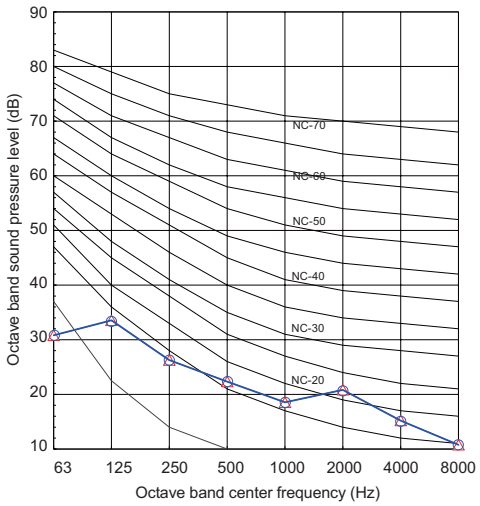

Maximum operation (2 ZONE)

Sound pressure level (dB(A))	Cooling	Heating
	32	32

△——△ Heating
○——○ Cooling

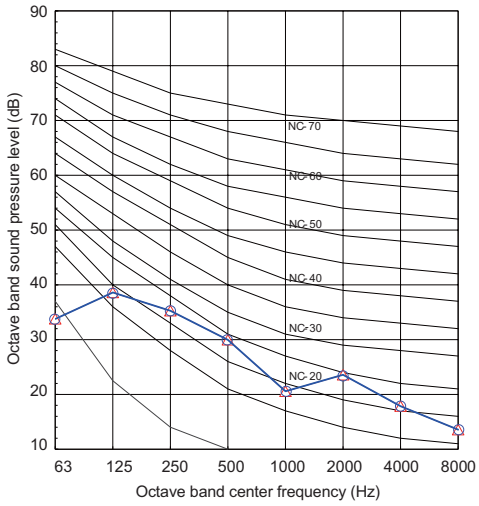

▼ HWT-1402S21S(M)(M3,M6,T6,T9)W-E

Maximum operation (1 ZONE)

Sound pressure level (dB(A))	Cooling	Heating
	32	32

△——△ Heating
○——○ Cooling

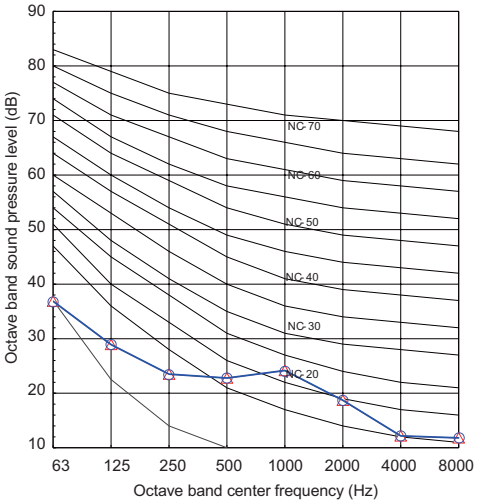

Maximum operation (2 ZONE)

Sound pressure level (dB(A))	Cooling	Heating
	32	32

△——△ Heating
○——○ Cooling

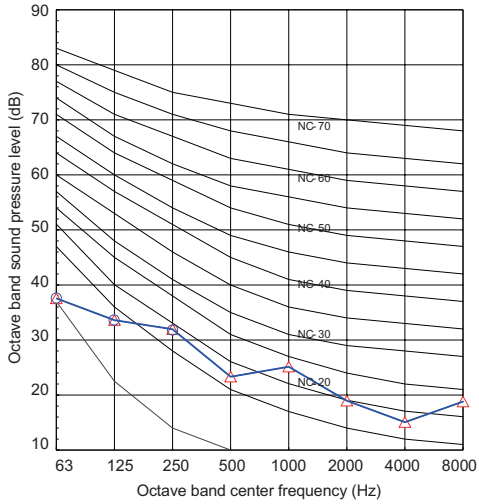

2-7-2. Sound Power

▼ HWT-601HWH(M3,T6)W-E HWT-1101XWH(M3,T6,T9)W-E

- Maximum/Rated/Silent operation

Sound power level (dB(A))	Cooling	Heating
	40	40

Cooling

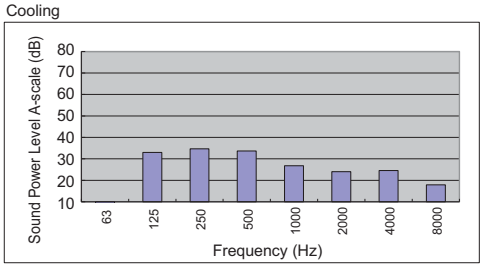

Heating

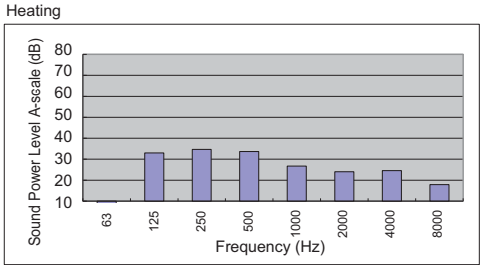

▼ HWT-1401XWH(M3,M6,T6,T9)W-E

- Maximum/Rated/Silent operation

Sound power level (dB(A))	Cooling	Heating
	45	45

Cooling

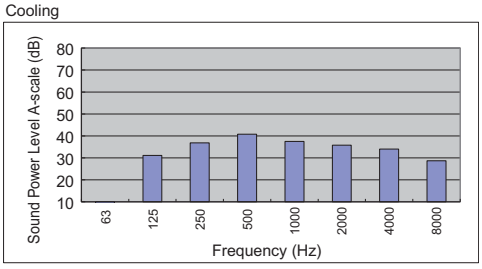

Heating

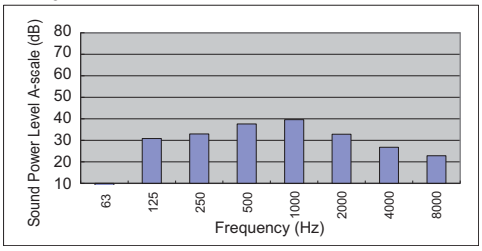

▼ HWT-602S21S(M)(M3,M6,T6)W-E
HWT-1102S21S(M)(M3,M6,T6,T9)W-E

Maximum operation (1 ZONE)

Sound power level (dB(A))	Cooling	Heating
	48	48

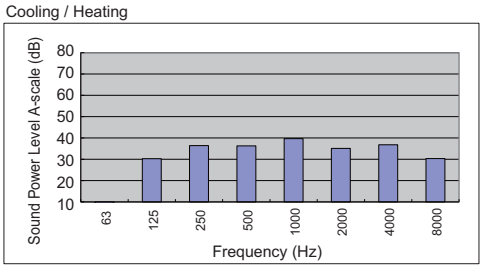

Maximum operation (2 ZONE)

Sound power level (dB(A))	Cooling	Heating
	48	48

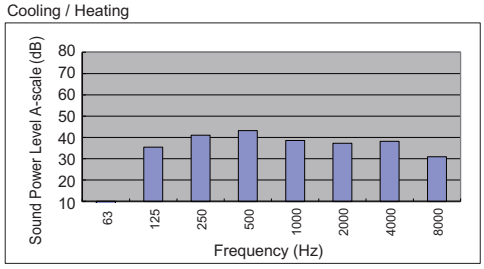

▼ HWT-1402S21S(M)(M3,M6,T6,T9)W-E

Maximum operation (1 ZONE)

Sound power level (dB(A))	Cooling	Heating
	48	48

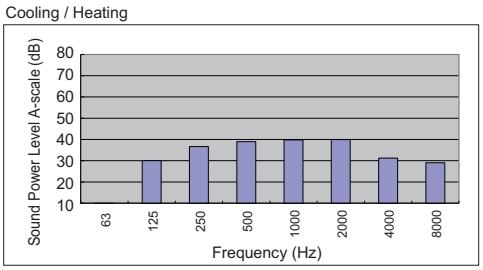

Maximum operation (2 ZONE)

Sound power level (dB(A))	Cooling	Heating
	48	48

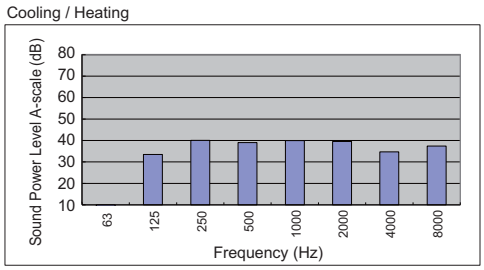

3. OUTDOOR UNIT

3-1. Specifications

3-1-1. Outdoor unit specifications

Wall Mounted Type

Unit name	Hydro unit		HWT-601XWHM3W-E, HWT-601XWHM6W-E, HWT-601XWHT6W-E			
	Outdoor unit		HWT-401HW-E		HWT-601HW-E	
Heating capacity *1 (kW)			4.0		6.0	
Cooling capacity *2 (kW)			4.0		5.0	
Variable range of compressor frequency			10 - 80 Hz		10 - 100 Hz	
Power source			1 phase 50 Hz 220-240 V			
Operation mode			Heating	Cooling	Heating	Cooling
Electric characteristic *1 *2	Total	Current (A)	4.08	5.38	5.78	7.11
		Power (kW)	0.77	1.15	1.25	1.52
		Power factor (%)	82	93	94	93
Operating noise sound power level (1)	Hydro unit (dB(A))		40	40	40	40
	Outdoor unit (dB(A))		65	62	65	62
Coefficient of performance *1 *2			5.20	3.45	4.80	3.30
Hydro unit	Outer dimension	Height (mm)	720			
		Width (mm)	450			
		Depth (mm)	235			
	Net weight (kg)		27			
	Color		White			
	Remote controller Outer dimension *3	Height (mm)	120			
		Width (mm)	120			
		Depth (mm)	16			
	Circulation pump	Motor output (W)	60 (MAX)			
		Rated flow rate (L/min)	11.6	11.5	17.3	14.3
		Type	Non-self-suction centrifugal pump			
	Heat exchanger		Plate-type heat exchange			
Outdoor unit	Outer dimension	Height (mm)	630			
		Width (mm)	800			
		Depth (mm)	300			
	Net weight (kg)		42			
	Color		Silky shade			
	Compressor	Motor output (W)	1100			
		Type	Twin rotary type with DC-inverter variable speed control			
		Model	DX150A1T-21F			
	Fan motor	Standard air capacity (m³/min)	33.6	36.4	33.6	36.4
		Motor output (W)	43			
Refrigerant piping	Connection method		Flare connection (Conformity with ISO 14903 in Hydro side)			
	Hydro unit	Liquid	Ø6.4			
		Gas	Ø12.7			
	Outdoor unit	Liquid	Ø6.4			
		Gas	Ø12.7			
	Maximum length (m)		30			
	Maximum chargeless length (m)		20			
	Maximum height difference (m)		±30			
	Minimum length (m)		5			
Refrigerant	Refrigerant name		R32			
	Charge amount (kg)		0.9			
Water piping	Pipe diameter		R1			
	Maximum length (m)		None (Need the flow rate 14 L/min or more)			
	Maximum height difference (m)		±7			
	Maximum working water pressure (kPa) *4		430			
Operating temperature range	Hydro unit (°C) *5 (Cooling / Heating / Hot water)		5-32 / 5-32 / 5-32			
	Outdoor unit (°C) (Cooling / Heating / Hot water)		10-43 / -20-25 / -20-43			
Operating humidity range	Hydro unit (%)		15-85			
	Outdoor unit (%)		15-100			
Wiring connection	Power wiring		3 wires: including earth wire (Outdoor unit)			
	Connecting line		4 wires: including earth wire			

*1 Heating performance measurement conditions: outside air temperature 7°C, water supply temperature 30°C, outlet water temperature 35°C, refrigerant piping length 7.5 m (no height difference).
*2 Cooling performance measurement conditions: outside air temperature 35°C, water supply temperature 12°C, outlet water temperature 7°C, refrigerant piping length 7.5 m (no height difference).
*3 • The remote controller should be shipped with the hydro unit.
• Use two 1.5-meter wires to connect the hydro unit with the remote controller.
*4 Check the water piping for leakage under the maximum operating pressure.
*5 Do not leave the hydro unit at 5°C or below.
(1)Max operation
Heating: outside air temperature 7°C, water supply temperature 47°C, outlet water temperature 55°C.
Cooling: outside air temperature 35°C, water supply temperature 12°C, outlet water temperature 7°C.

Wall Mounted Type

Unit name	Hydro unit		HWT-1101XWHM3W-E, HWT-1101XWHM6W-E, HWT-1101XWHT6W-E, HWT-1101XWHT9W-E			
	Outdoor unit		HWT-801H(R)W-E		HWT-1101H(R)W-E	
Heating capacity *1 (kW)			8.0		11.0	
Cooling capacity *2 (kW)			6.0		8.0	
Variable range of compressor frequency			10 - 90 Hz		10 - 100 Hz	
Power source			1 phase 50 Hz 220-240 V			
Operation mode			Heating	Cooling	Heating	Cooling
Electric characteristic *1 *2	Total	Current (A)	7.05	8.51	10.60	12.82
		Power (kW)	1.54	1.88	2.39	2.86
		Power factor (%)	95	96	98	97
Operating noise sound power level (1)	Hydro unit (dB(A))		40	40	40	40
	Outdoor unit (dB(A))		65	63	65	64
Coefficient of performance *1 *2			5.19	3.20	4.60	2.80
Hydro unit	Outer dimension	Height (mm)	720			
		Width (mm)	450			
		Depth (mm)	235			
	Net weight (kg)		27			
	Color		White			
	Remote controller Outer dimension *3	Height (mm)	120			
		Width (mm)	120			
		Depth (mm)	16			
	Circulation pump	Motor output (W)	60 (MAX)			
		Rated flow rate (L/min)	23.0	16.7	32.1	22.7
		Type	Non-self-suction centrifugal pump			
	Heat exchanger		Plate-type heat exchange			
Outdoor unit	Outer dimension	Height (mm)	1050			
		Width (mm)	1010			
		Depth (mm)	370			
	Net weight (kg)		75			
	Color		Silky shade			
	Compressor	Motor output (W)	2000			
		Type	Twin rotary type with DC-inverter variable speed control			
		Model	NX220A1FJ-20N			
	Fan motor	Standard air capacity (m³/min)	52.4	52.4	58.4	52.4
		Motor output (W)	60			
Refrigerant piping	Connection method		Flare connection (Conformity with ISO 14903 in Hydro side)			
	Hydro unit	Liquid	Ø6.4			
		Gas	Ø15.9			
	Outdoor unit	Liquid	Ø6.4			
		Gas	Ø15.9			
	Maximum length (m)		30			
	Maximum chargeless length (m)		8			
	Maximum height difference (m)		±30			
	Minimum length (m)		5			
Refrigerant	Refrigerant name		R32			
	Charge amount (kg)		1.25			
Water piping	Pipe diameter		R1			
	Maximum length (m)		None (Need the flow rate 14 L/min or more)			
	Maximum height difference (m)		±7			
	Maximum working water pressure (kPa) *4		430			
Operating temperature range	Hydro unit (°C) *5 (Cooling / Heating / Hot water)		5-32 / 5-32 / 5-32			
	Outdoor unit (°C) (Cooling / Heating / Hot water)		10-43 / -25-25 / -25-43			
Operating humidity range	Hydro unit (%)		15-85			
	Outdoor unit (%)		15-100			
Wiring connection	Power wiring		3 wires: including earth wire (Outdoor unit)			
	Connecting line		4 wires: including earth wire			

*1 Heating performance measurement conditions: outside air temperature 7°C, water supply temperature 30°C, outlet water temperature 35°C, refrigerant piping length 7.5 m (no height difference).
*2 Cooling performance measurement conditions: outside air temperature 35°C, water supply temperature 12°C, outlet water temperature 7°C, refrigerant piping length 7.5 m (no height difference).
*3 • The remote controller should be shipped with the hydro unit.
• Use two 1.5-meter wires to connect the hydro unit with the remote controller.
*4 Check the water piping for leakage under the maximum operating pressure.
*5 Do not leave the hydro unit at 5°C or below.
(1)Max operation
Heating: outside air temperature 7°C, water supply temperature 47°C, outlet water temperature 55°C.
Cooling: outside air temperature 35°C, water supply temperature 12°C, outlet water temperature 7°C.

Wall Mounted Type

Unit name	Hydro unit		HWT-1401XWHM3W-E, HWT-1401XWHM6W-E, HWT-1401XWHT6W-E, HWT-1401XWHT9W-E	
	Outdoor unit		HWT-1401H(R)W-E	
Heating capacity *1 (kW)			14.0	
Cooling capacity *2 (kW)			10.0	
Variable range of compressor frequency			10 - 82 Hz	
Power source			1 phase 50 Hz 220-240 V	
Operation mode			Heating	Cooling
Electric characteristic *1 *2	Total	Current (A)	14.2	18.7
		Power (kW)	3.04	4.08
		Power factor (%)	93.0	95.0
Operating noise sound power level (1)	Hydro unit (dB(A))		45	45
	Outdoor unit (dB(A))		72	70
Coefficient of performance *1 *2			4.60	2.45
Hydro unit	Outer dimension	Height (mm)	720	
		Width (mm)	450	
		Depth (mm)	235	
	Net weight (kg)		28	
	Color		White	
	Remote controller Outer dimension *3	Height (mm)	120	
		Width (mm)	120	
		Depth (mm)	16	
	Circulation pump	Motor output (W)	75 (MAX)	
		Rated flow rate (L/min)	40.5	28.6
		Type	Non-self-suction centrifugal pump	
	Heat exchanger		Plate-type heat exchange	
Outdoor unit	Outer dimension	Height (mm)	1050	
		Width (mm)	1010	
		Depth (mm)	370	
	Net weight (kg)		88	
	Color		Silky shade	
	Compressor	Motor output (W)	3750	
		Type	Twin rotary type with DC-inverter variable speed control	
		Model	DX380A2TJ-20M	
	Fan motor	Standard air capacity (m³/min)	78.7	
		Motor output (W)	100	
Refrigerant piping	Connection method		Flare connection (Conformity with ISO 14903 in Hydro side)	
	Hydro unit	Liquid	Ø6.4	
		Gas	Ø15.9	
	Outdoor unit	Liquid	Ø6.4	
		Gas	Ø15.9	
	Maximum length (m)		25	
	Maximum chargeless length (m)		8	
	Maximum height difference (m)		±25	
	Minimum length (m)		5	
Refrigerant	Refrigerant name		R32	
	Charge amount (kg)		1.40	
Water piping	Pipe diameter		R1	
	Maximum length (m)		None (Need the flow rate 18 L/min or more)	
	Maximum height difference (m)		±7	
	Maximum working water pressure (kPa) *4		430	
Operating temperature range	Hydro unit (°C) *5 (Cooling / Heating / Hot water)		5-32 / 5-32 / 5-32	
	Outdoor unit (°C) (Cooling / Heating / Hot water)		10-43 / -25-25 / -25-43	
Operating humidity range	Hydro unit (%)		15-85	
	Outdoor unit (%)		15-100	
Wiring connection	Power wiring		3 wires: including earth wire (Outdoor unit)	
	Connecting line		4 wires: including earth wire	

*1 Heating performance measurement conditions: outside air temperature 7°C, water supply temperature 30°C, outlet water temperature 35°C, refrigerant piping length 7.5 m (no height difference).
*2 Cooling performance measurement conditions: outside air temperature 35°C, water supply temperature 12°C, outlet water temperature 7°C, refrigerant piping length 7.5 m (no height difference).
*3 • The remote controller should be shipped with the hydro unit.
• Use two 1.5-meter wires to connect the hydro unit with the remote controller.
*4 Check the water piping for leakage under the maximum operating pressure.
*5 Do not leave the hydro unit at 5°C or below.
(1)Max operation
Heating: outside air temperature 7°C, water supply temperature 47°C, outlet water temperature 55°C.
Cooling: outside air temperature 35°C, water supply temperature 12°C, outlet water temperature 7°C.

Wall Mounted Type

Unit name	Hydro unit		HWT-1101XWHM3W-E, HWT-1101XWHM6W-E, HWT-1101XWHT6W-E, HWT-1101XWHT9W-E			
	Outdoor unit		HWT-801H8(R)W-E		HWT-1101H8(R)W-E	
Heating capacity *1 (kW)			8.0		11.0	
Cooling capacity *2 (kW)			6.0		8.0	
Variable range of compressor frequency			10 - 53 Hz		10 - 64 Hz	
Power source			3 phase 50 Hz 380-415 V			
Operation mode			Heating	Cooling	Heating	Cooling
Electric characteristic *1 *2	Total	Current (A)	2.50	3.10	3.63	4.37
		Power (kW)	1.55	1.94	2.30	2.88
		Power factor (%)	93	93	94	98
Operating noise sound power level (1)	Hydro unit (dB(A))		40	44	40	44
	Outdoor unit (dB(A))		71	66	70	67
Coefficient of performance *1 *2			5.15	3.04	4.78	2.77
Hydro unit	Outer dimension	Height (mm)	720			
		Width (mm)	450			
		Depth (mm)	235			
	Net weight (kg)		27			
	Color		White			
	Remote controller Outer dimension *3	Height (mm)	120			
		Width (mm)	120			
		Depth (mm)	16			
	Circulation pump	Motor output (W)	60 (MAX)			
		Rated flow rate (L/min)	23.0	16.7	32.1	22.7
		Type	Non-self-suction centrifugal pump			
	Heat exchanger		Plate-type heat exchange			
Outdoor unit	Outer dimension	Height (mm)	1050			
		Width (mm)	1010			
		Depth (mm)	370			
	Net weight (kg)		92			
	Color		Silky shade			
	Compressor	Motor output (W)	3750			
		Type	Twin rotary type with DC-inverter variable speed control			
		Model	RX380A2TJ-20M			
	Fan motor	Standard air capacity (m³/min)	58.4	58.4	78.7	78.7
		Motor output (W)	100			
Refrigerant piping	Connection method		Flare connection (Conformity with ISO 14903 in Hydro side)			
	Hydro unit	Liquid	Ø6.4			
		Gas	Ø15.9			
	Outdoor unit	Liquid	Ø6.4			
		Gas	Ø15.9			
	Maximum length (m)		30			
	Maximum chargeless length (m)		8			
	Maximum height difference (m)		±30			
	Minimum length (m)		5			
Refrigerant	Refrigerant name		R32			
	Charge amount (kg)		1.30			
Water piping	Pipe diameter		R1			
	Maximum length (m)		None (Need the flow rate 14 L/min or more)			
	Maximum height difference (m)		±7			
	Maximum working water pressure (kPa) *4		430			
Operating temperature range	Hydro unit (°C) *5 (Cooling / Heating / Hot water)		5-32 / 5-32 / 5-32			
	Outdoor unit (°C) (Cooling / Heating / Hot water)		10-43 / -25-25 / -25-43			
Operating humidity range	Hydro unit (%)		15-85			
	Outdoor unit (%)		15-100			
Wiring connection	Power wiring		3 wires: including earth wire (Outdoor unit)			
	Connecting line		4 wires: including earth wire			

*1 Heating performance measurement conditions: outside air temperature 7°C, water supply temperature 30°C, outlet water temperature 35°C, refrigerant piping length 7.5 m (no height difference).
*2 Cooling performance measurement conditions: outside air temperature 35°C, water supply temperature 12°C, outlet water temperature 7°C, refrigerant piping length 7.5 m (no height difference).
*3 • The remote controller should be shipped with the hydro unit.
• Use two 1.5-meter wires to connect the hydro unit with the remote controller.
*4 Check the water piping for leakage under the maximum operating pressure.
*5 Do not leave the hydro unit at 5°C or below.
(1)Max operation
Heating: outside air temperature 7°C, water supply temperature 47°C, outlet water temperature 55°C.
Cooling: outside air temperature 35°C, water supply temperature 12°C, outlet water temperature 7°C.

Wall Mounted Type

Unit name	Hydro unit		HWT-1401XWHM3W-E, HWT-1401XWHM6W-E, HWT-1401XWHT6W-E, HWT-1401XWHT9W-E	
	Outdoor unit		HWT-1401H8(R)W-E	
Heating capacity *1 (kW)			14.0	
Cooling capacity *2 (kW)			10.0	
Variable range of compressor frequency			10 - 82 Hz	
Power source			3 phase 50 Hz 380-415 V	
Operation mode			Heating	Cooling
Electric characteristic *1 *2	Total	Current (A)	4.6	5.6
		Power (kW)	3.04	4.08
		Power factor (%)	93.0	95.0
Operating noise sound power level (1)	Hydro unit (dB(A))		45	45
	Outdoor unit (dB(A))		72	70
Coefficient of performance *1 *2			4.60	2.45
Hydro unit	Outer dimension	Height (mm)	720	
		Width (mm)	450	
		Depth (mm)	235	
	Net weight (kg)		28	
	Color		White	
	Remote controller Outer dimension *3	Height (mm)	120	
		Width (mm)	120	
		Depth (mm)	16	
	Circulation pump	Motor output (W)	75 (MAX)	
		Rated flow rate (L/min)	40.5	28.6
		Type	Non-self-suction centrifugal pump	
	Heat exchanger		Plate-type heat exchange	
Outdoor unit	Outer dimension	Height (mm)	1050	
		Width (mm)	1010	
		Depth (mm)	370	
	Net weight (kg)		92	
	Color		Silky shade	
	Compressor	Motor output (W)	3750	
		Type	Twin rotary type with DC-inverter variable speed control	
		Model	RX380A2TJ-20M	
	Fan motor	Standard air capacity (m³/min)	78.7	
		Motor output (W)	100	
Refrigerant piping	Connection method		Flare connection (Conformity with ISO 14903 in Hydro side)	
	Hydro unit	Liquid	Ø6.4	
		Gas	Ø15.9	
	Outdoor unit	Liquid	Ø6.4	
		Gas	Ø15.9	
	Maximum length (m)		25	
	Maximum chargeless length (m)		8	
	Maximum height difference (m)		±25	
	Minimum length (m)		5	
Refrigerant	Refrigerant name		R32	
	Charge amount (kg)		1.40	
Water piping	Pipe diameter		R1	
	Maximum length (m)		None (Need the flow rate 18 L/min or more)	
	Maximum height difference (m)		±7	
	Maximum working water pressure (kPa) *4		430	
Operating temperature range	Hydro unit (°C) *5 (Cooling / Heating / Hot water)		5-32 / 5-32 / 5-32	
	Outdoor unit (°C) (Cooling / Heating / Hot water)		10-43 / -25-25 / -25-43	
Operating humidity range	Hydro unit (%)		15-85	
	Outdoor unit (%)		15-100	
Wiring connection	Power wiring		3 wires: including earth wire (Outdoor unit)	
	Connecting line		4 wires: including earth wire	

*1 Heating performance measurement conditions: outside air temperature 7°C, water supply temperature 30°C, outlet water temperature 35°C, refrigerant piping length 7.5 m (no height difference).
*2 Cooling performance measurement conditions: outside air temperature 35°C, water supply temperature 12°C, outlet water temperature 7°C, refrigerant piping length 7.5 m (no height difference).
*3 • The remote controller should be shipped with the hydro unit.
• Use two 1.5-meter wires to connect the hydro unit with the remote controller.
*4 Check the water piping for leakage under the maximum operating pressure.
*5 Do not leave the hydro unit at 5°C or below.
(1)Max operation
Heating: outside air temperature 7°C, water supply temperature 47°C, outlet water temperature 55°C.
Cooling: outside air temperature 35°C, water supply temperature 12°C, outlet water temperature 7°C.

All In One Type

Unit name	Hydro unit		HWT-602S21SM3W-E, HWT-602S21SM6W-E HWT-602S21ST6W-E, HWT-602S21MM3W-E HWT-602S21MM6W-E, HWT-602S21MT6W-E			
	Outdoor unit		HWT-401HW-E		HWT-601HW-E	
Heating capacity *1 (kW)			4.0		6.0	
Cooling capacity *2 (kW)			4.0		5.0	
Variable range of compressor frequency			10 - 80 Hz		10 - 100 Hz	
Power source			1 phase 50 Hz 220-240 V			
Operation mode			Heating	Cooling	Heating	Cooling
Electric characteristic *1 *2	Total	Current (A)	4.08	5.38	5.78	7.11
		Power (kW)	0.77	1.15	1.25	1.52
		Power factor (%)	82	93	94	93
Operating noise sound power level (1)	Hydro unit (dB(A))		48	48	48	48
	Outdoor unit (dB(A))		65	62	65	62
Coefficient of performance *1 *2			5.20	3.45	4.80	3.30
Hydro unit	Outer dimension	Height (mm)	1700			
		Width (mm)	595			
		Depth (mm)	670			
	Net weight (kg)		116 (SM/ST), 122 (MM/MT)			
	Color		White			
	Remote controller Outer dimension *3	Height (mm)	120			
		Width (mm)	120			
		Depth (mm)	16			
	Circulation pump	Motor output (W)	MAX 75 W (S21S), MAX 75 W × 2 (S21M)			
		Rated flow rate (L/min)	11.6	11.5	17.3	14.3
		Type	Non-self-suction centrifugal pump			
	Heat exchanger		Plate-type heat exchange			
Outdoor unit	Tank	Water volume (L)	210			
		Maximum water temperature (°C)	65			
		Maximum water Pressure (bar)	10			
	Outer dimension	Height (mm)	630			
		Width (mm)	800			
		Depth (mm)	300			
	Net weight (kg)		42			
	Color		Silky shade			
	Compressor	Motor output (W)	1100			
		Type	Twin rotary type with DC-inverter variable speed control			
		Model	DX150A1T-21F			
	Fan motor	Standard air capacity (m³/min)	33.6	36.4	33.6	36.4
		Motor output (W)	43			
Refrigerant piping	Connection method		Flare connection (Conformity with ISO 14903 in Hydro side)			
	Hydro unit	Liquid	Ø6.4			
		Gas	Ø12.7			
	Outdoor unit	Liquid	Ø6.4			
		Gas	Ø12.7			
	Maximum length (m)		30			
	Maximum chargeless length (m)		20			
	Maximum height difference (m)		±30			
	Minimum length (m)		5			
Refrigerant	Refrigerant name		R32			
	Charge amount (kg)		0.9			
Water piping	Pipe diameter		R3/4"			
	Maximum length (m)		None (Need the flow rate 10 L/min or more)			
	Maximum height difference (m)		±7			
	Maximum working water pressure (kPa) *4		250			
Operating temperature range	Hydro unit (°C) *5 (Cooling / Heating / Hot water)		5-32 / 5-32 / 5-32			
	Outdoor unit (°C) (Cooling / Heating / Hot water)		10-43 / -20-25 / -20-43			
Operating humidity range	Hydro unit (%)		15-85			
	Outdoor unit (%)		15-100			
Wiring connection	Power wiring		3 wires: including earth wire (Outdoor unit)			
	Connecting line		4 wires: including earth wire			

*1 Heating performance measurement conditions: outside air temperature 7°C, water supply temperature 30°C, outlet water temperature 35°C, refrigerant piping length 7.5 m (no height difference).
*2Cooling performance measurement conditions: outside air temperature 35°C, water supply temperature 12°C, outlet water temperature 7°C, refrigerant piping length 7.5 m (no height difference).
*3 • The remote controller should be shipped with the hydro unit.
• Use two 1.5-meter wires to connect the hydro unit with the remote controller.
*4 Check the water piping for leakage under the maximum operating pressure.
*5 Do not leave the hydro unit at 5°C or below.
(1). Max operation
Heating: outside air temperature 7°C, water supply temperature 47°C, outlet water temperature 55°C.
Cooling: outside air temperature 35°C, water supply temperature 12°C, outlet water temperature 7°C.

All In One Type

Unit name	Hydro unit		HWT-1102S21SM3W-E, HWT-1102S21SM6W-E HWT-1102S21ST6W-E, HWT-1102S21ST9W-E HWT-1102S21MM3W-E, HWT-1102S21MM6W-E HWT-1102S21MT6W-E, HWT-1102S21MT9W-E			
	Outdoor unit		HWT-801H(R)W-E		HWT-1101H(R)W-E	
Heating capacity *1 (kW)			8.0		11.0	
Cooling capacity *2 (kW)			6.0		8.0	
Variable range of compressor frequency			10 - 90 Hz		10 - 100 Hz	
Power source			1 phase 50 Hz 220-240 V			
Operation mode			Heating	Cooling	Heating	Cooling
Electric characteristic *1 *2	Total	Current (A)	7.05	8.51	10.60	12.82
		Power (kW)	1.54	1.88	2.39	2.86
		Power factor (%)	95	96	98	97
Operating noise sound power level (1)	Hydro unit (dB(A))		48	48	48	48
	Outdoor unit (dB(A))		65	63	65	64
Coefficient of performance *1 *2			5.19	3.20	4.60	2.80
Hydro unit	Outer dimension	Height (mm)	1700			
		Width (mm)	595			
		Depth (mm)	670			
	Net weight (kg)		116 (SM/ST), 122 (MM/MT6), 123 (MT9)			
	Color		White			
	Remote controller Outer dimension *3	Height (mm)	120			
		Width (mm)	120			
		Depth (mm)	16			
	Circulation pump	Motor output (W)	MAX 75 W (S21S), MAX 75 W × 2 (S21M)			
		Rated flow rate (L/min)	23.0	16.7	32.1	22.7
		Type	Non-self-suction centrifugal pump			
	Heat exchanger		Plate-type heat exchange			
Outdoor unit	Tank	Water volume (L)	210			
		Maximum water temperature (°C)	65			
		Maximum water Pressure (bar)	10			
	Outer dimension	Height (mm)	1050			
		Width (mm)	1010			
		Depth (mm)	370			
	Net weight (kg)		75			
	Color		Silky shade			
	Compressor	Motor output (W)	2000			
		Type	Twin rotary type with DC-inverter variable speed control			
		Model	NX220A1FJ-20N			
	Fan motor	Standard air capacity (m³/min)	52.4	52.4	58.4	52.4
		Motor output (W)	60			
Refrigerant piping	Connection method		Flare connection (Conformity with ISO 14903 in Hydro side)			
	Hydro unit	Liquid	Ø6.4			
		Gas	Ø15.9			
	Outdoor unit	Liquid	Ø6.4			
		Gas	Ø15.9			
	Maximum length (m)		30			
	Maximum chargeless length (m)		8			
	Maximum height difference (m)		±30			
	Minimum length (m)		5			
Refrigerant	Refrigerant name		R32			
	Charge amount (kg)		1.25			
Water piping	Pipe diameter		R3/4"			
	Maximum length (m)		None (Need the flow rate 14 L/min or more)			
	Maximum height difference (m)		±7			
	Maximum working water pressure (kPa) *4		250			
Operating temperature range	Hydro unit (°C) *5 (Cooling / Heating / Hot water)		5-32 / 5-32 / 5-32			
	Outdoor unit (°C) (Cooling / Heating / Hot water)		10-43 / -25-25 / -25-43			
Operating humidity range	Hydro unit (%)		15-85			
	Outdoor unit (%)		15-100			
Wiring connection	Power wiring		3 wires: including earth wire (Outdoor unit)			
	Connecting line		4 wires: including earth wire			

*1 Heating performance measurement conditions: outside air temperature 7°C, water supply temperature 30°C, outlet water temperature 35°C, refrigerant piping length 7.5 m (no height difference).
*2Cooling performance measurement conditions: outside air temperature 35°C, water supply temperature 12°C, outlet water temperature 7°C, refrigerant piping length 7.5 m (no height difference).
*3 • The remote controller should be shipped with the hydro unit.
• Use two 1.5-meter wires to connect the hydro unit with the remote controller.
*4 Check the water piping for leakage under the maximum operating pressure.
*5 Do not leave the hydro unit at 5°C or below.
(1). Max operation
Heating: outside air temperature 7°C, water supply temperature 47°C, outlet water temperature 55°C.
Cooling: outside air temperature 35°C, water supply temperature 12°C, outlet water temperature 7°C.

All In One Type

Unit name	Hydro unit		HWT-1402S21SM3W-E, HWT-1402S21SM6W-E HWT-1402S21ST6W-E, HWT-1402S21ST9W-E HWT-1402S21MM3W-E, HWT-1402S21MM6W-E HWT-1402S21MT6W-E, HWT-1402S21MT9W-E	
	Outdoor unit		HWT-1401H(R)W-E	
Heating capacity *1 (kW)			14.0	
Cooling capacity *2 (kW)			10.0	
Variable range of compressor frequency			10 - 82 Hz	
Power source			1 phase 50 Hz 220-240 V	
Operation mode			Heating	Cooling
Electric characteristic *1 *2	Total	Current (A)	14.2	18.7
		Power (kW)	3.04	4.08
		Power factor (%)	93.0	95.0
Operating noise sound power level (1)	Hydro unit (dB(A))		48	48
	Outdoor unit (dB(A))		72	70
Coefficient of performance *1 *2			4.60	2.45
Hydro unit	Outer dimension	Height (mm)	1700	
		Width (mm)	595	
		Depth (mm)	670	
	Net weight (kg)		117 (SM/ST), 123 (MM/MT6), 124 (MT9)	
	Color		White	
	Remote controller Outer dimension *3	Height (mm)	120	
		Width (mm)	120	
		Depth (mm)	16	
	Circulation pump	Motor output (W)	MAX 130 W (S21S), MAX 130 W, MAX 75 W (S21M)	
		Rated flow rate (L/min)	40.5	28.6
		Type	Non-self-suction centrifugal pump	
	Heat exchanger		Plate-type heat exchange	
Outdoor unit	Tank	Water volume (L)	210	
		Maximum water temperature (°C)	65	
		Maximum water Pressure (bar)	10	
	Outer dimension	Height (mm)	1050	
		Width (mm)	1010	
		Depth (mm)	370	
	Net weight (kg)		88	
	Color		Silky shade	
	Compressor	Motor output (W)	3750	
		Type	Twin rotary type with DC-inverter variable speed control	
		Model	DX380A2TJ-20M	
	Fan motor	Standard air capacity (m³/min)	78.7	78.7
		Motor output (W)	100	
Refrigerant piping	Connection method		Flare connection (Conformity with ISO 14903 in Hydro side)	
	Hydro unit	Liquid	Ø6.4	
		Gas	Ø15.9	
	Outdoor unit	Liquid	Ø6.4	
		Gas	Ø15.9	
	Maximum length (m)		25	
	Maximum chargeless length (m)		8	
	Maximum height difference (m)		±25	
	Minimum length (m)		5	
Refrigerant	Refrigerant name		R32	
	Charge amount (kg)		1.40	
Water piping	Pipe diameter		R3/4"	
	Maximum length (m)		None (Need the flow rate 18 L/min or more)	
	Maximum height difference (m)		±7	
	Maximum working water pressure (kPa) *4		250	
Operating temperature range	Hydro unit (°C) *5 (Cooling / Heating / Hot water)		5-32 / 5-32 / 5-32	
	Outdoor unit (°C) (Cooling / Heating / Hot water)		10-43 / -25-25 / -25-43	
Operating humidity range	Hydro unit (%)		15-85	
	Outdoor unit (%)		15-100	
Wiring connection	Power wiring		3 wires: including earth wire (Outdoor unit)	
	Connecting line		4 wires: including earth wire	

*1 Heating performance measurement conditions: outside air temperature 7°C, water supply temperature 30°C, outlet water temperature 35°C, refrigerant piping length 7.5 m (no height difference).
*2Cooling performance measurement conditions: outside air temperature 35°C, water supply temperature 12°C, outlet water temperature 7°C, refrigerant piping length 7.5 m (no height difference).
*3 • The remote controller should be shipped with the hydro unit.
• Use two 1.5-meter wires to connect the hydro unit with the remote controller.
*4 Check the water piping for leakage under the maximum operating pressure.
*5 Do not leave the hydro unit at 5°C or below.
(1). Max operation
Heating: outside air temperature 7°C, water supply temperature 47°C, outlet water temperature 55°C.
Cooling: outside air temperature 35°C, water supply temperature 12°C, outlet water temperature 7°C.

3-2. Dimension

HWT-401HW-E, HWT-601HW-E

Unit: mm

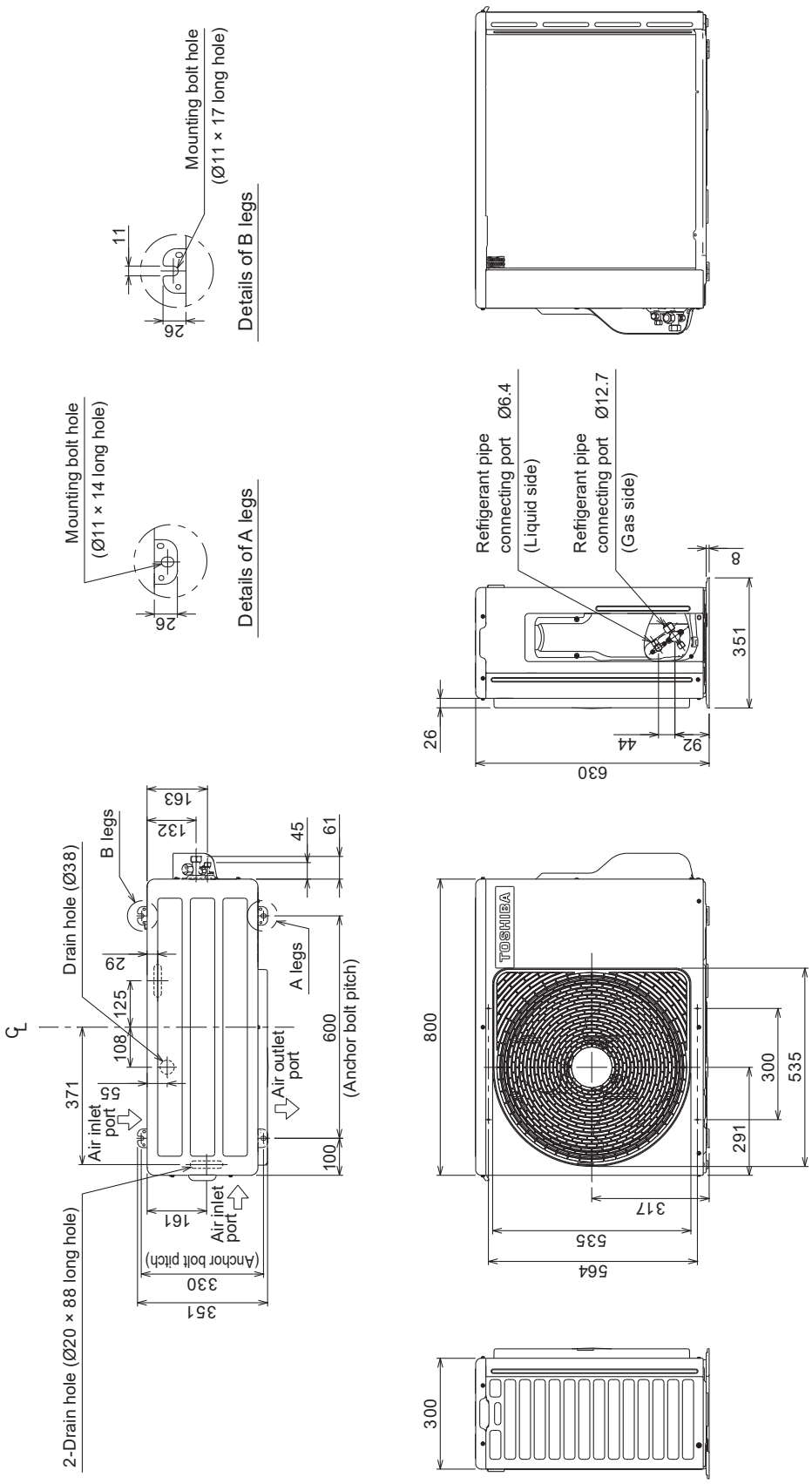

HWT-801HW-E, HWT-1101HW-E, HWT-1401HW-E, HWT-801HRW-E, HWT-1101HRW-E HWT-1401HRW-E, HWT-801H8W-E, HWT-1101H8W-E, HWT-1401H8W-E HWT-801H8RW-E, HWT-1101H8RW-E, HWT-1401H8RW-E

Unit: mm

	Name	Note
①	Refrigerant pipe hole Hydro Unit / Outdoor Unit connecting wire inlet hole	——
②	Power supply inlet hole	Ø38 Knockout hole

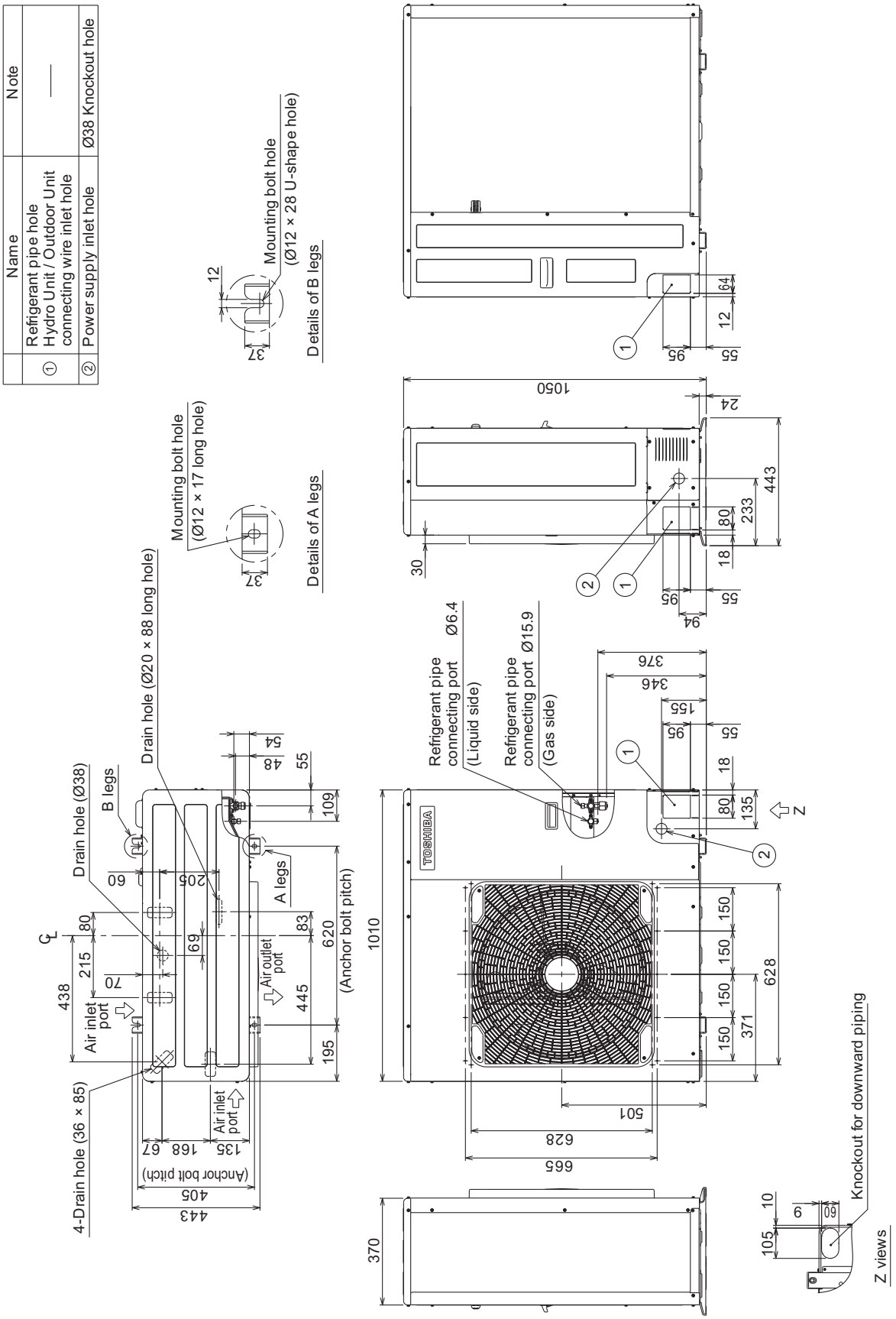

3-3. Piping Diagram

Hydro unit - Wall Mounted Type

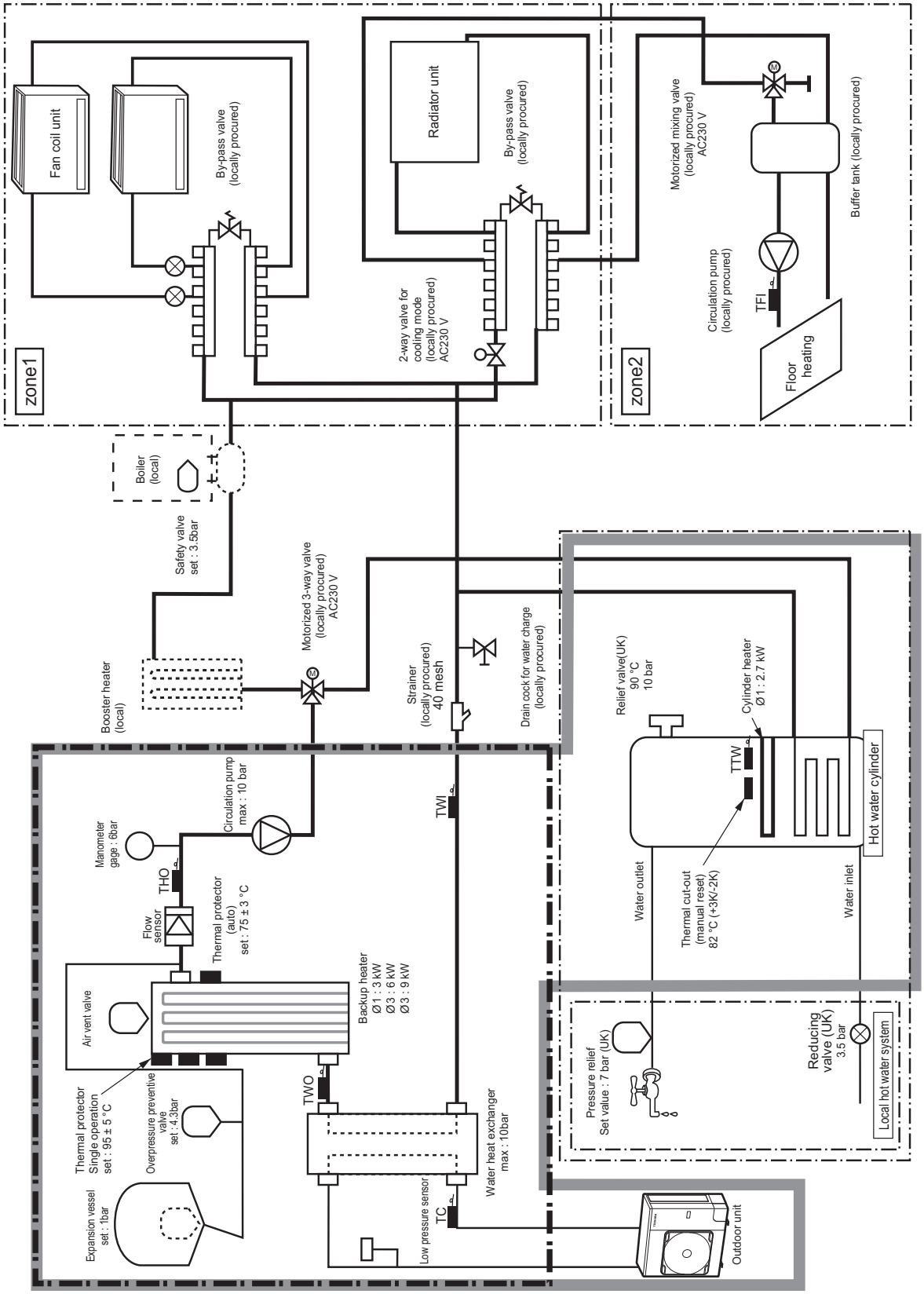

Hydro unit - All In One Type

▼Water system diagram

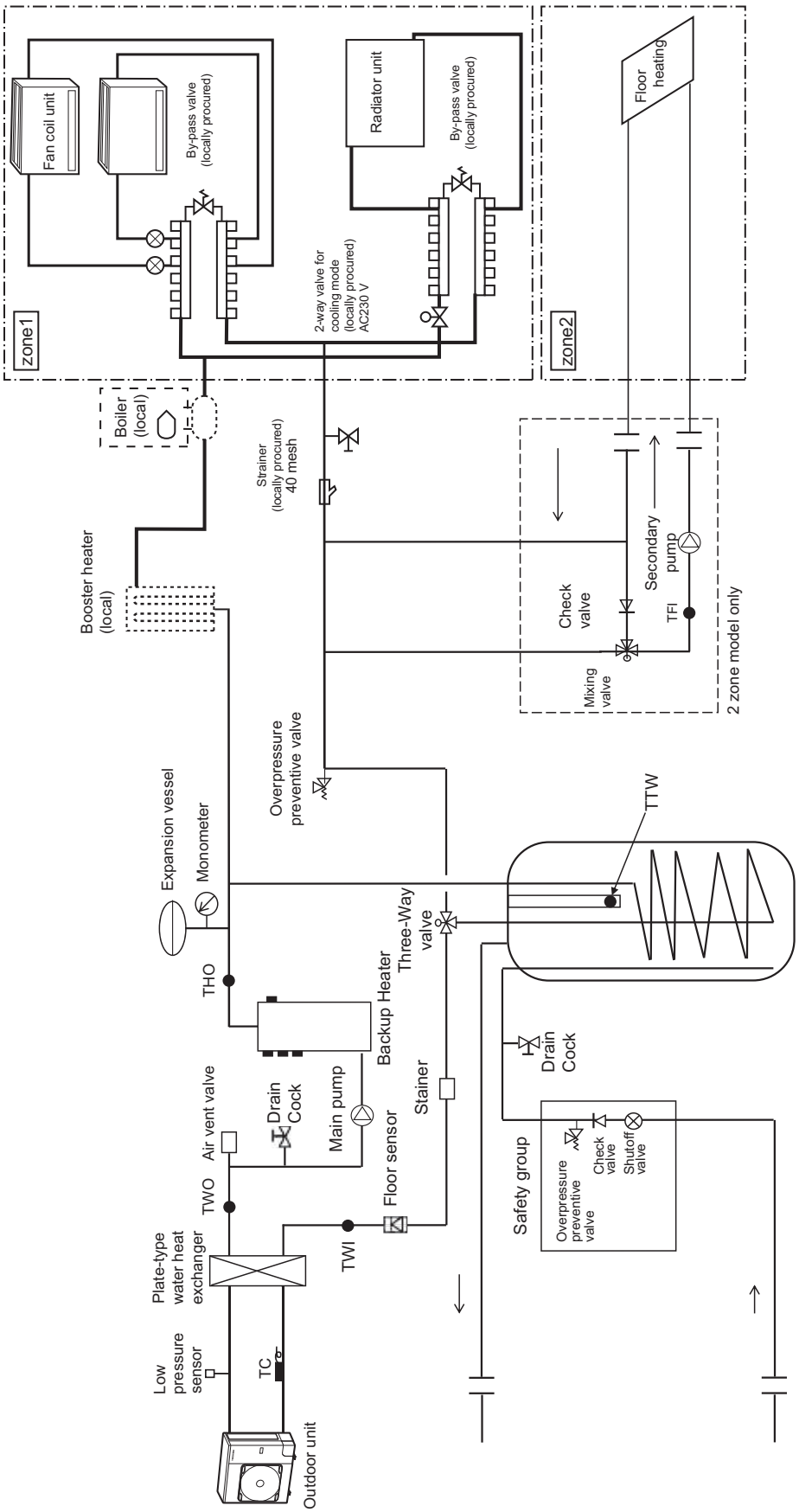

3-4. Wiring Diagram

3-4-1. Outdoor Unit (Single phase type)

HWT-401HW-E, HWT-601HW-E

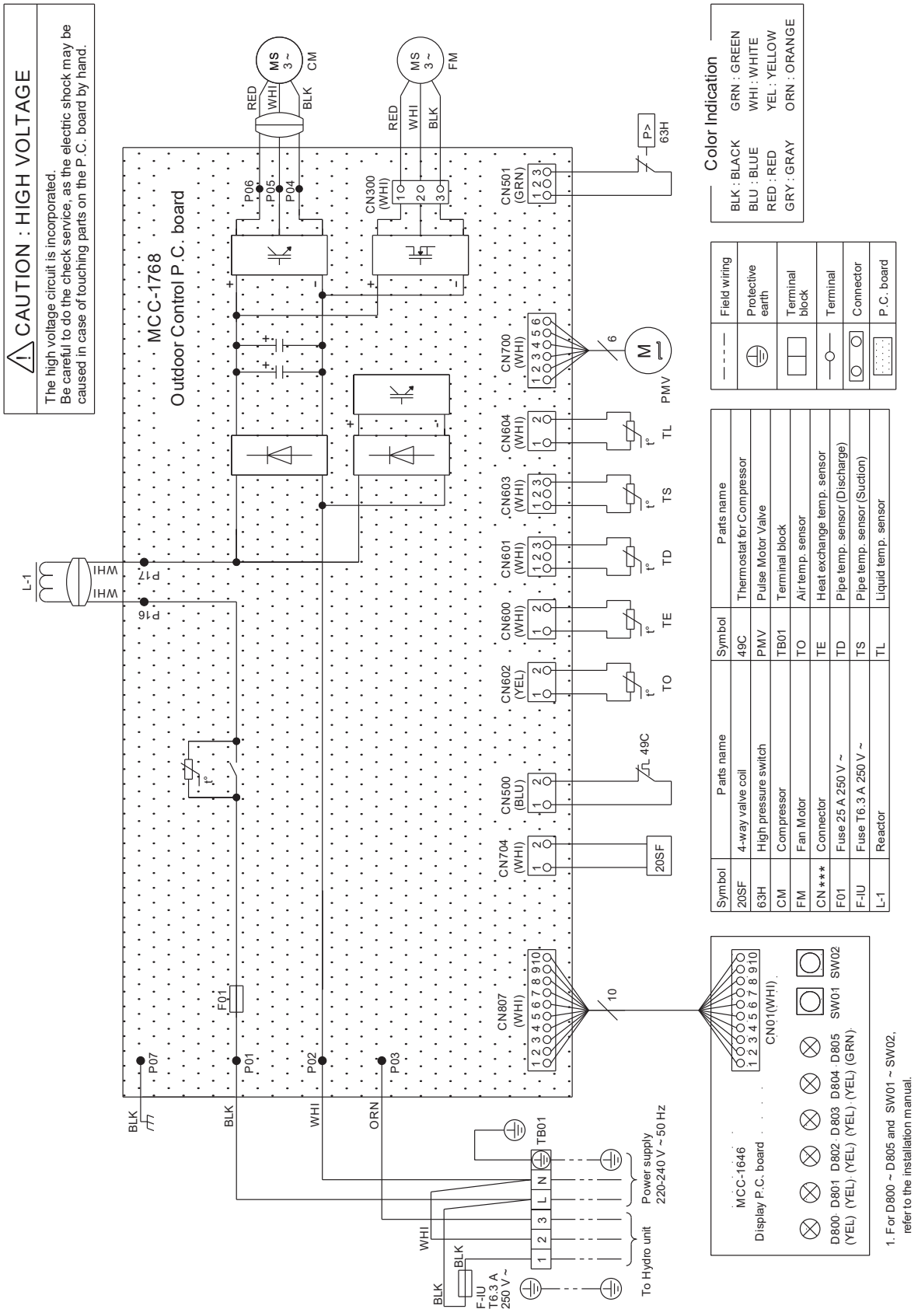

HWT-801HW-E, HWT-801HRW-E
HWT-1101HW-E, HWT-1101HRW-E

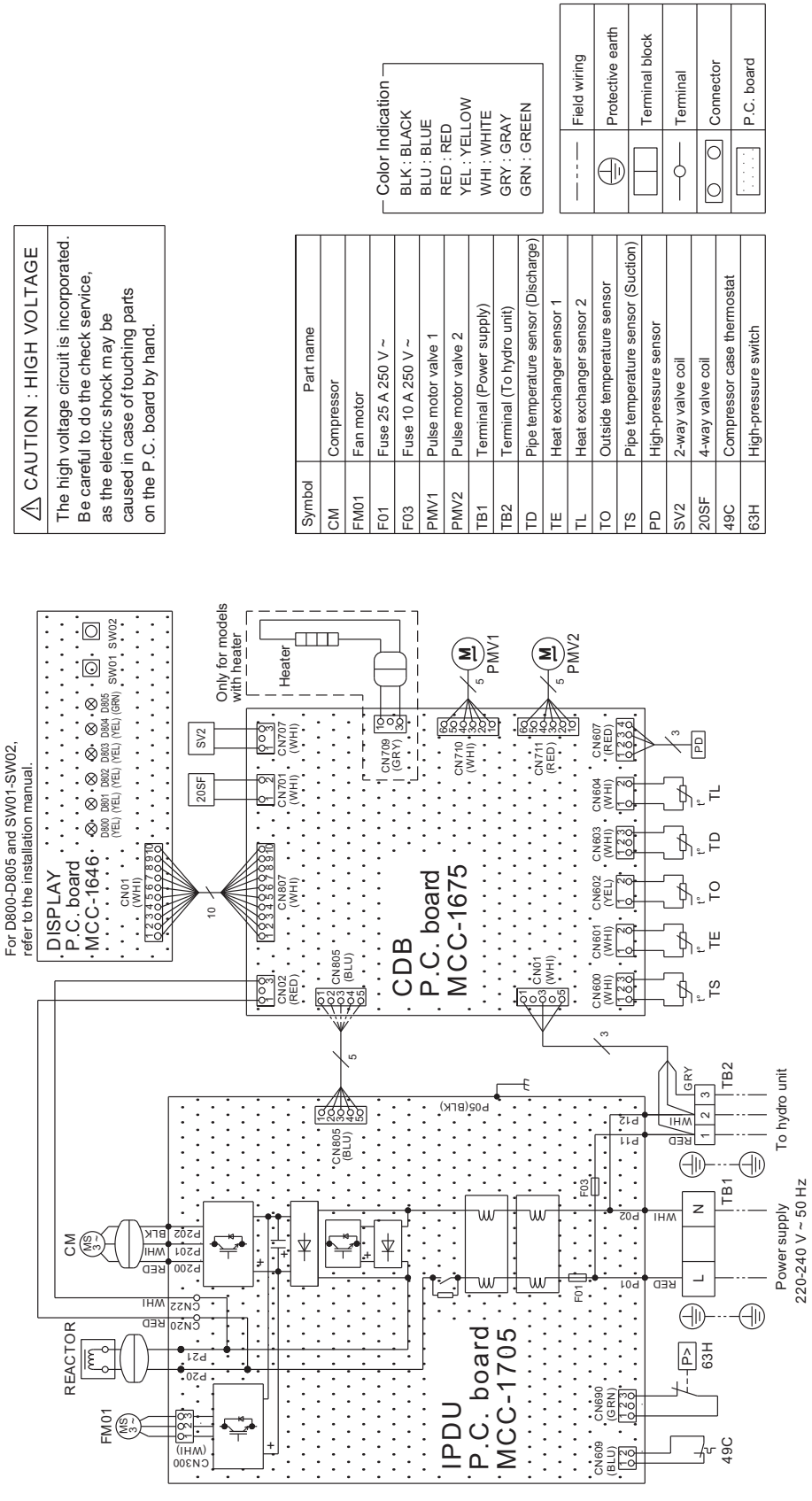

HWT-1401HW-E, HWT-1401HRW-E

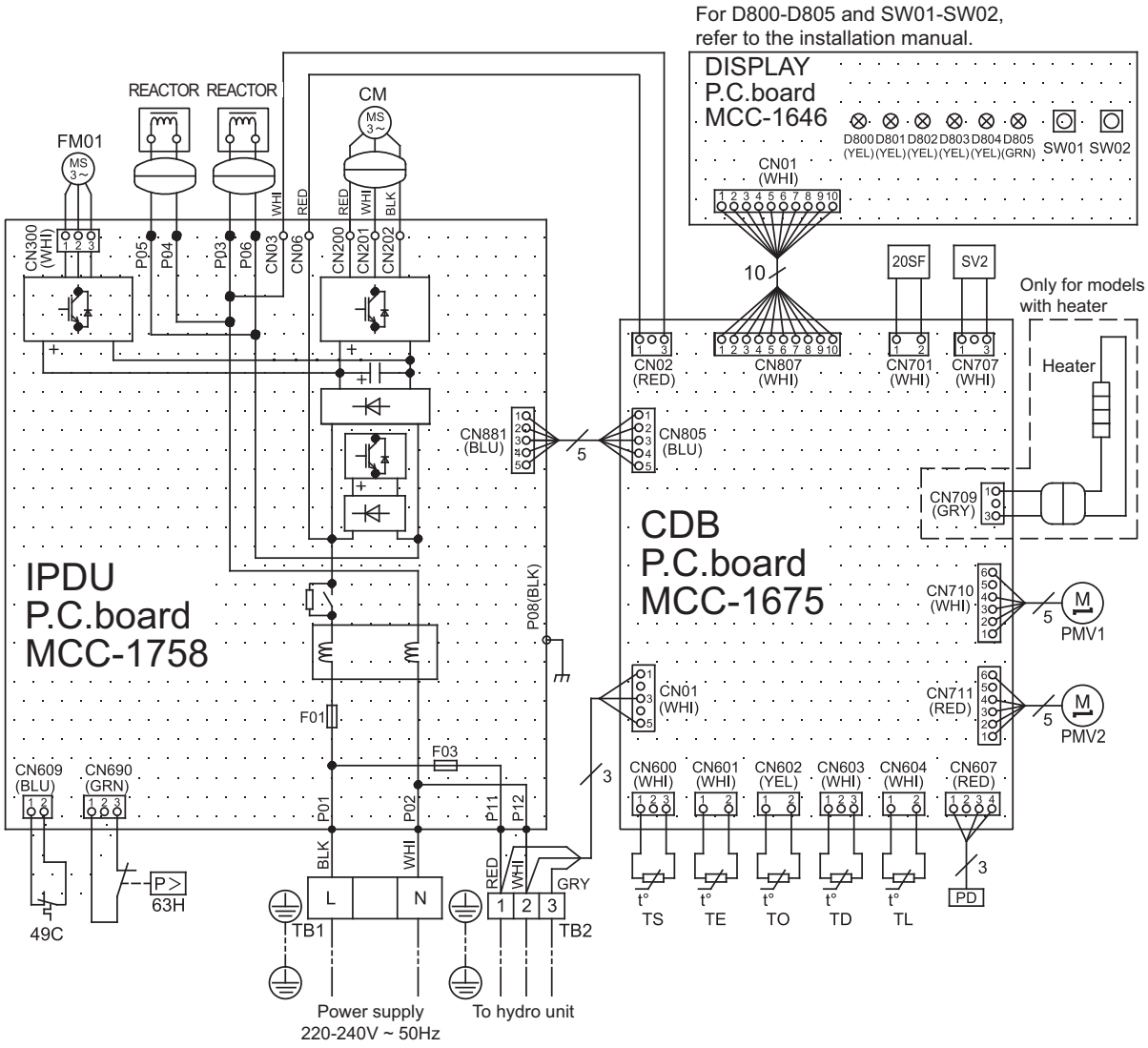

Symbol	Part name
CM	Compressor
FM01	Fan motor
F01	Fuse 25A 250V ~
F03	Fuse 10A 250V~
PMV1	Pulse motor valve 1
PMV2	Pulse motor valve 2
TB1	Terminal (Power supply)
TB2	Terminal (To hydro unit)
TD	Pipe temperature sensor(Discharge)
TE	Heat exchanger sensor 1
TL	Heat exchanger sensor 2
TO	Outside temperature sensor
TS	Pipe temperature sensor(Suction)
PD	High-pressure sensor
SV2	2-way valve coil
20SF	4-way valve coil
49C	Compressor case thermostat
63H	High-pressure switch

Color Indication
BLK : BLACK
BLU : BLUE
RED: RED
YEL : YELLOW
WHI : WHITE
GRY : GRAY
BRW : BROWN

—--—	Field wiring
⏚	Protective earth
▭	Terminal block
—○—	Terminal
○ ○	Connector
⋮	P.C.board

⚠ CAUTION : HIGH VOLTAGE

The high voltage circuit is incorporated. Be careful to do the check service, as the electric shock may be caused in case of touching parts on the P.C.board by hand.

HWT-801H8W-E, HWT-1101H8W-E, HWT-1401H8W-E
HWT-801H8RW-E, HWT-1101H8RW-E, HWT-1401H8RW-E

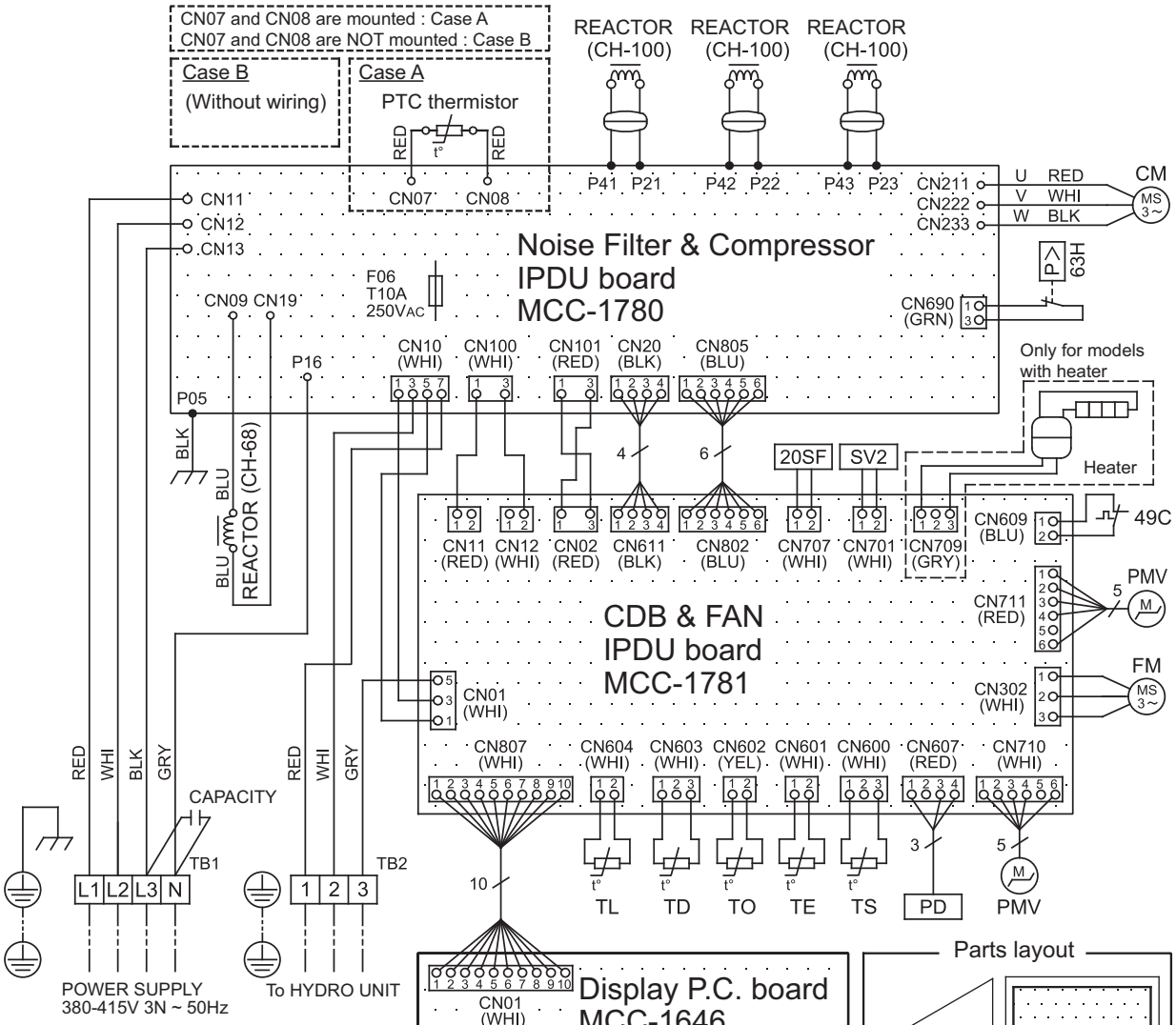

For D800 ~ D805 and SW01 ~ SW02, refer to the installation manual.

Symbol	Part name
CM	Compressor
FM	Fan motor
F06	Fuse 10A 250V AC
PD	High-pressure sensor
PMV	Pulse motor valve
SV2	2-way valve coil
TB1	Terminal (Power supply)
TB2	Terminal (To hydro unit)
TD	Pipe temperature sensor(Discharge)
TE	Heat exchanger sensor 1
TL	Heat exchanger sensor 2
TO	Outside temperature sensor
TS	Pipe temperature sensor(Suction)
20SF	4-way valve coil
49C	Compressor case thermostat
63H	High-pressure switch

Color Indication

BLK : BLACK
BLU : BLUE
RED: RED
YEL : YELLOW
WHI : WHITE
GRY : GRAY
BRW : BROWN

	Field wiring
	Protective earth
	Terminal block
	Terminal
	Connector
	P.C.board

The 4-way valve coil will be energized only during the switching process.

⚠ CAUTION : HIGH VOLTAGE

The high voltage circuit is incorporated. Be careful to do the check service, as the electric shock may be caused in case of touching parts on the P.C.board by hand.

3-4-2. Power line

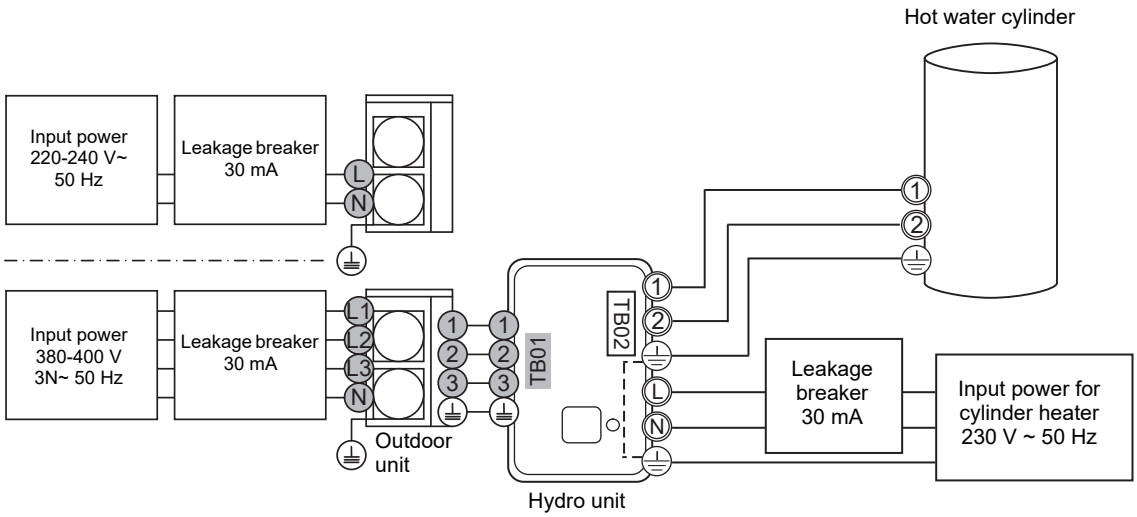

3-4-3. Wiring between Hydro Unit and Outdoor Unit

The dashed lines show on-site wiring.

Connect the system interconnection wires to the identical terminal numbers on the terminal block of each unit. Incorrect connection may cause a failure.

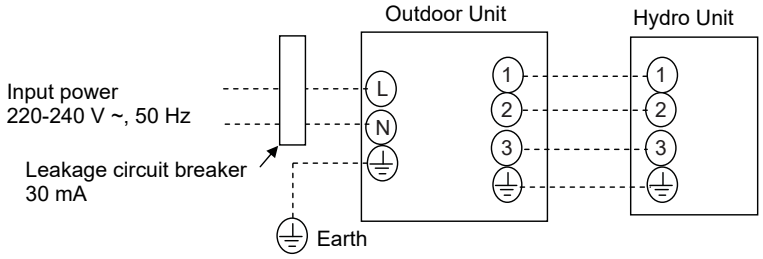

For the Air to Water Heat Pump, connect a power wire with the following specifications.

Model HWT-	401HW-E	601HW-E	801H(R)W-E	1101H(R)W-E	1401H(R)W-E
Power supply	1 phase 50 Hz 220-240 V				
Maximum running current	14.6 A		20.3 A		28.8 A
Recommended field fuse	16 A		25 A		32 A
Power supply wire*	2 × 2.5 mm² or more (H07 RN-F or 60245 IEC 66)				2 × 4 mm² or more (H07 RN-F or 60245 IEC 66)
Outdoor earth wire	1 × 2.5 mm² or more				1 × 4 mm² or more
Hydro / Outdoor connecting wires*	4 × 1.5 mm² or more (H07 RN-F or 60245 IEC 66)				

* Number of wire × wire size

Model HWT-	801H8(R)W-E	1101H8(R)W-E	1401H8(R)W-E
Power supply	380-415 V 3N~ 50 Hz		
Maximum running current	13.0 A		
Recommended field fuse	16 A		
Power supply wire*	2 × 2.5 mm² or more (H07 RN-F or 60245 IEC 66)		
Outdoor earth wire	1 × 2.5 mm² or more		
Hydro / Outdoor connecting wires*	4 × 1.5 mm² or more (H07 RN-F or 60245 IEC 66)		

* Number of wire × wire size

3-5. Operation Range

Item	Operation flow and applicable data, etc.
Operation Mode and Control Method	1) Heat a pump operation range of hot water supply, heating and cooling The heat pump operation range of hot water supply, heating and cooling is shown on the figures below.

Single phase 401, 601

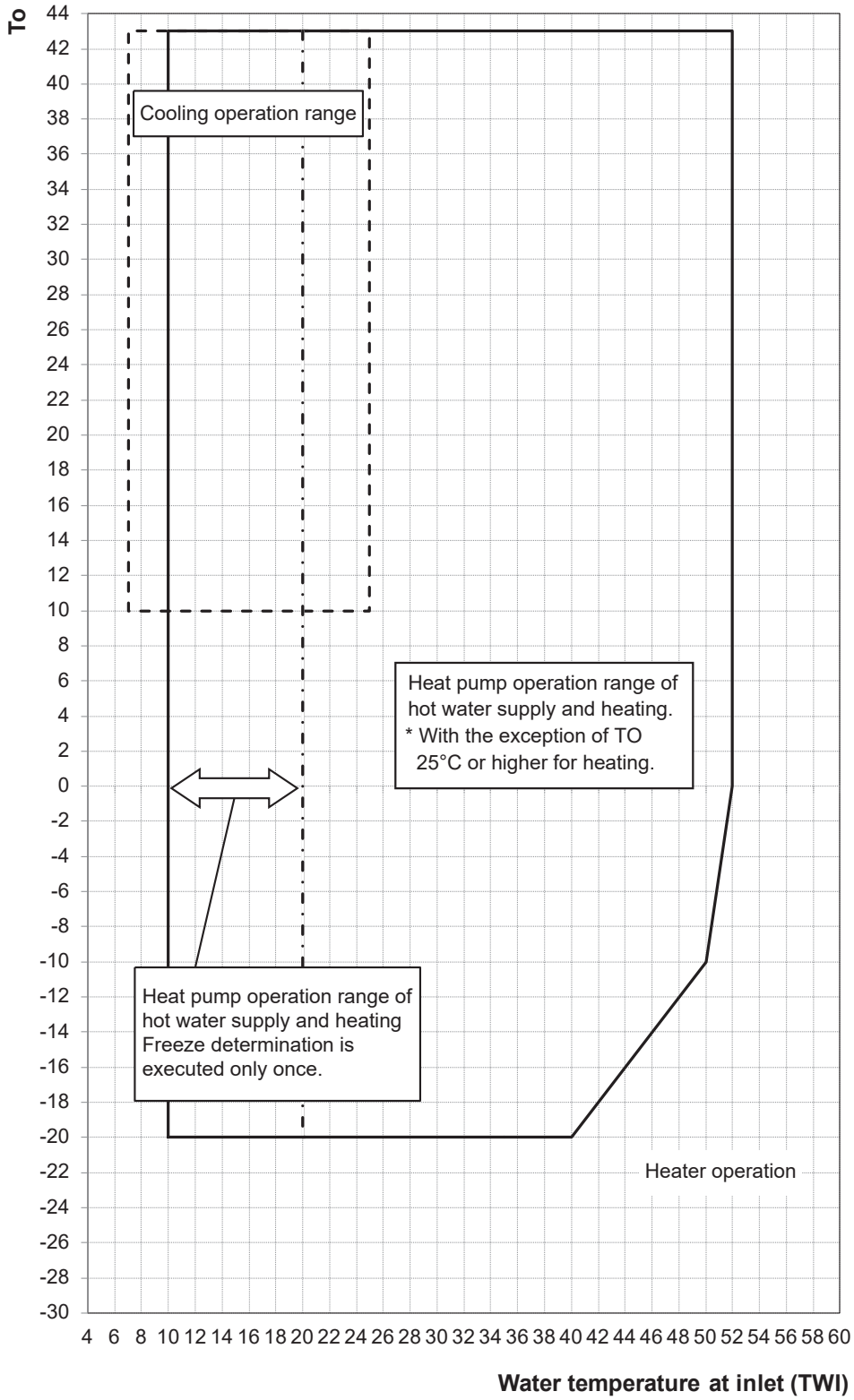

Item	Operation flow and applicable data, etc.
Operation Mode and Control Method	Single phase 801, 1101

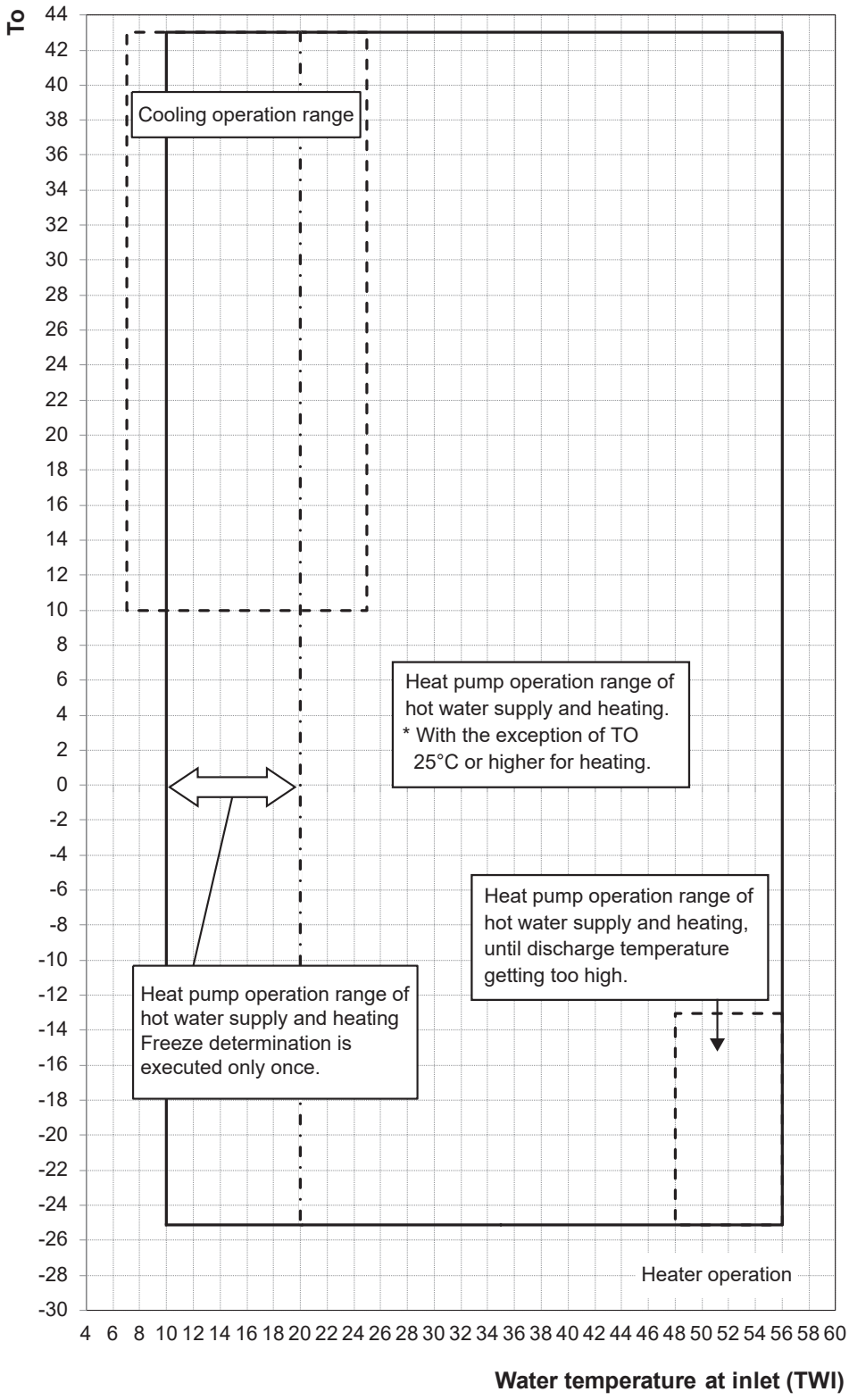

Item	Operation flow and applicable data, etc.
Operation Mode and Control Method	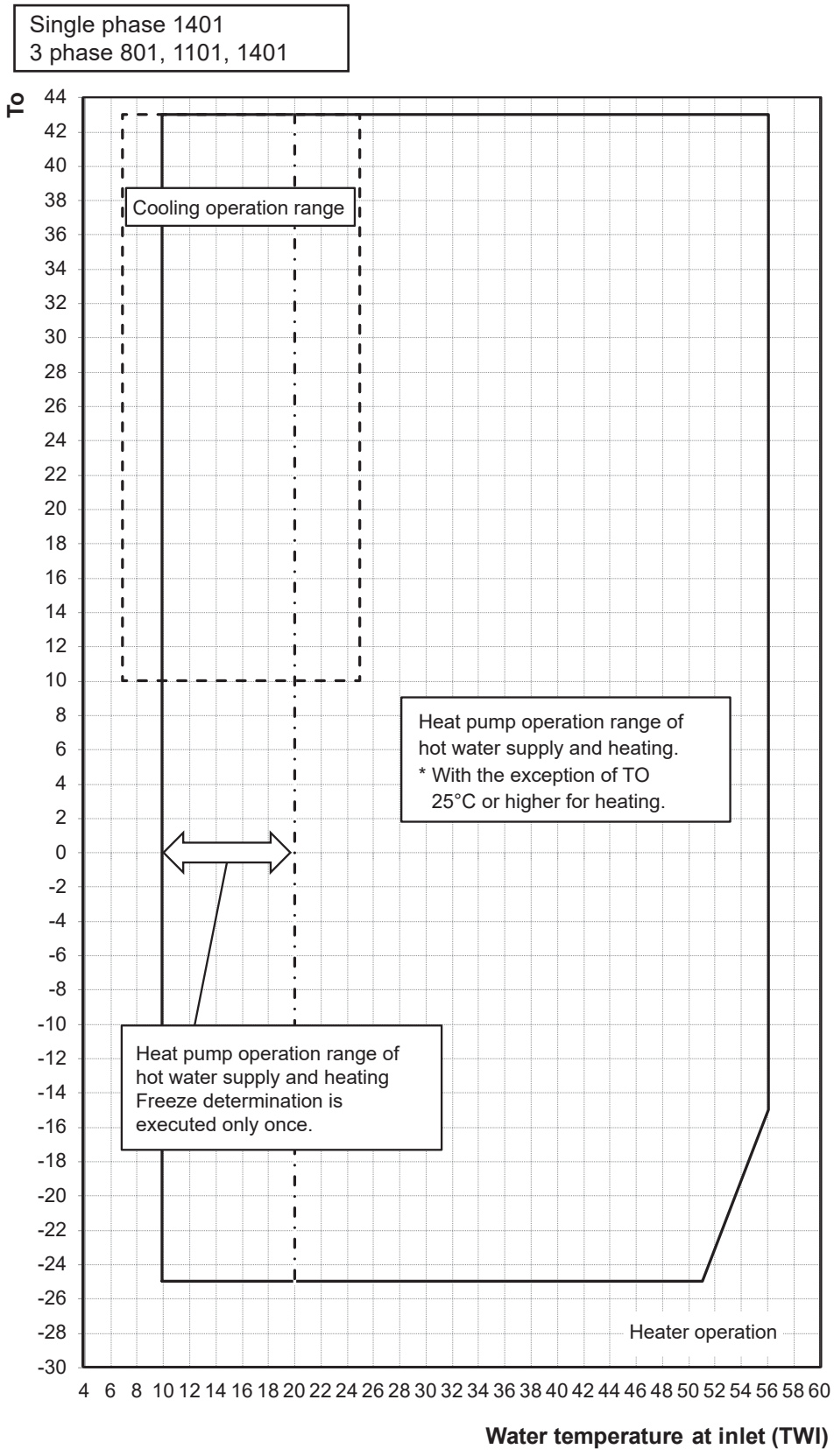

3-6. Sound Data

3-6-1. Sound Characteristics (NC Curve)

▼HWT-401HW-E

- Maximum operation

Sound pressure level (dB(A))	Cooling	Heating
	49	52

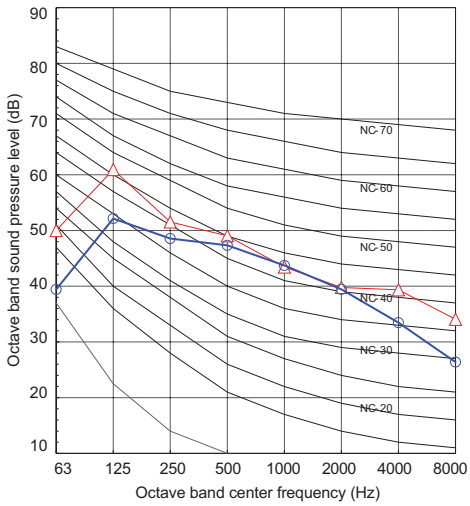

- Rated operation

Sound pressure level (dB(A))	Cooling	Heating
	46	45

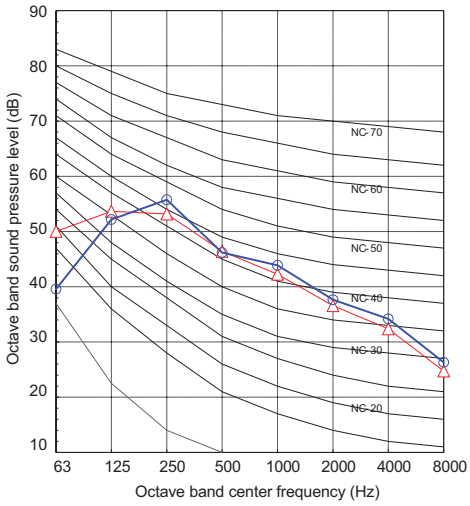

- Silent operation

Sound pressure level (dB(A))	Cooling	Heating
	41	40

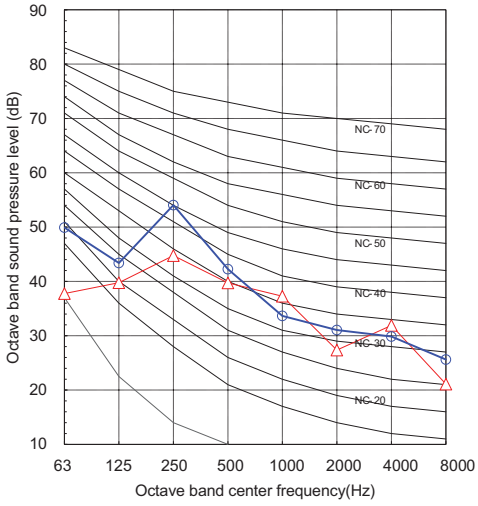

▼ HWT-601HW-E

- Maximum operation

Sound pressure level (dB(A))	Cooling	Heating
	49	53

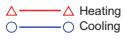

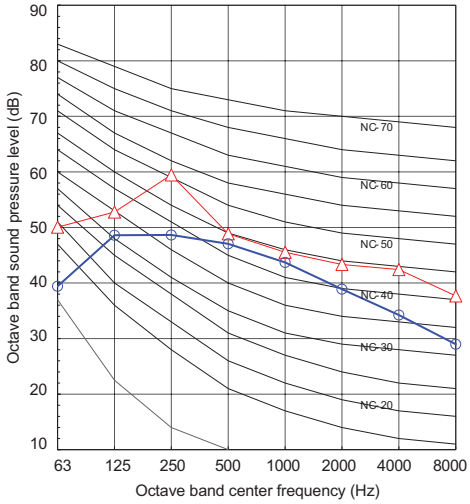

- Rated operation

Sound pressure level (dB(A))	Cooling	Heating
	46	46

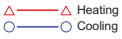

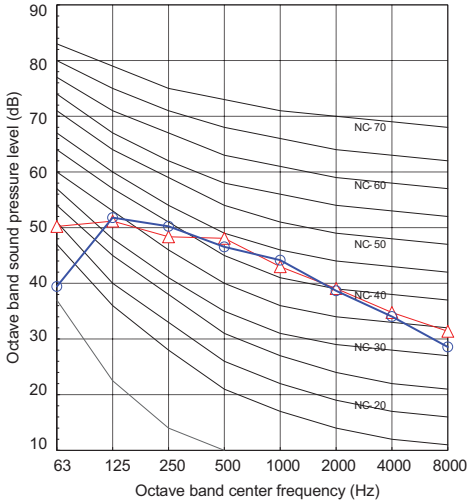

- Silent operation

Sound pressure level (dB(A))	Cooling	Heating
	41	42

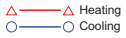

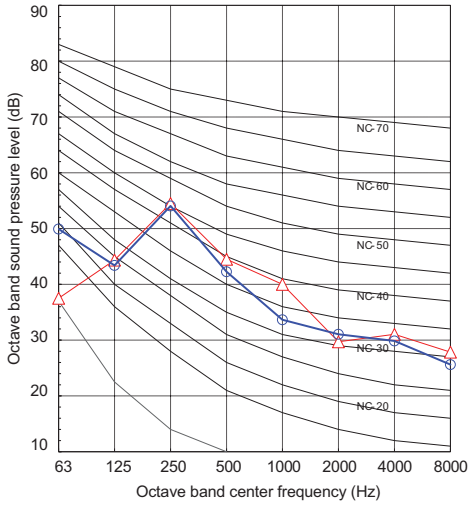

▼ HWT-801H(R)W-E

- Maximum operation

Sound pressure level (dB(A))	Cooling	Heating
	50	52

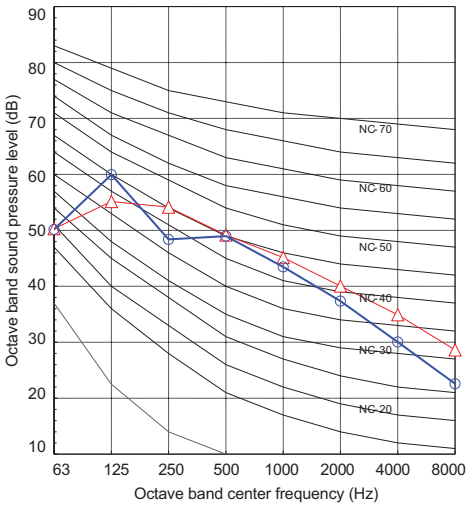

- Rated operation

Sound pressure level (dB(A))	Cooling	Heating
	50	51

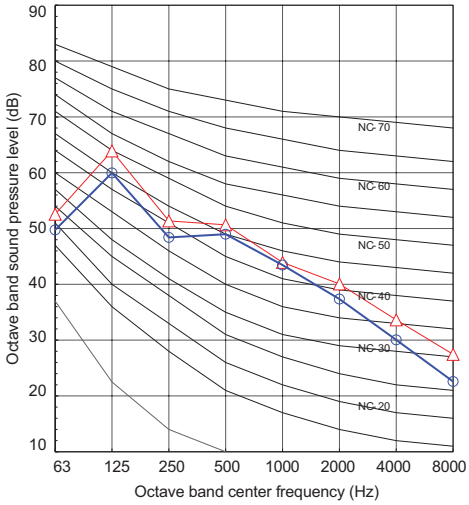

- Silent operation

Sound pressure level (dB(A))	Cooling	Heating
	47	46

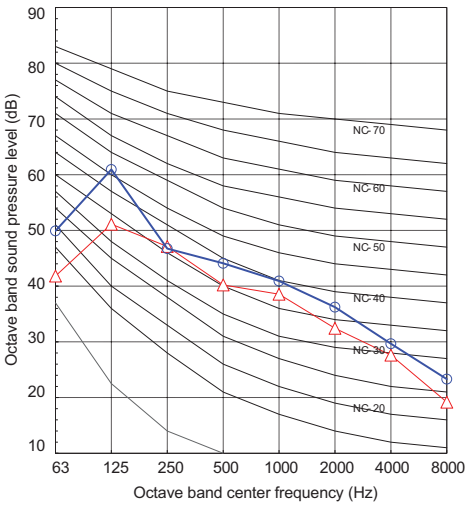

▼ HWT-1101H(R)W-E

- Maximum operation

Sound pressure level (dB(A))	Cooling	Heating
	51	53

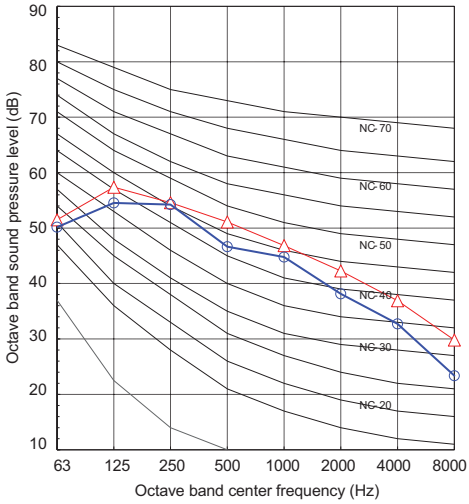

- Rated operation

Sound pressure level (dB(A))	Cooling	Heating
	51	51

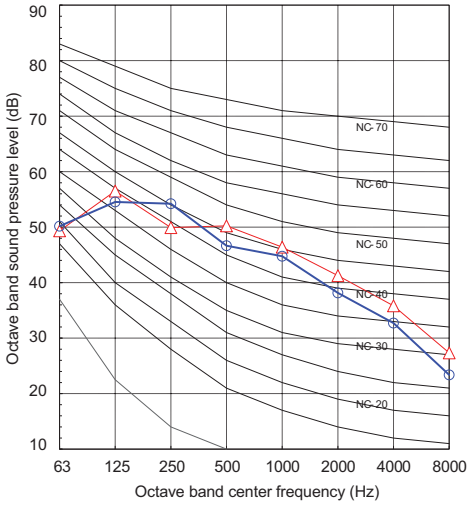

- Silent operation

Sound pressure level (dB(A))	Cooling	Heating
	47	49

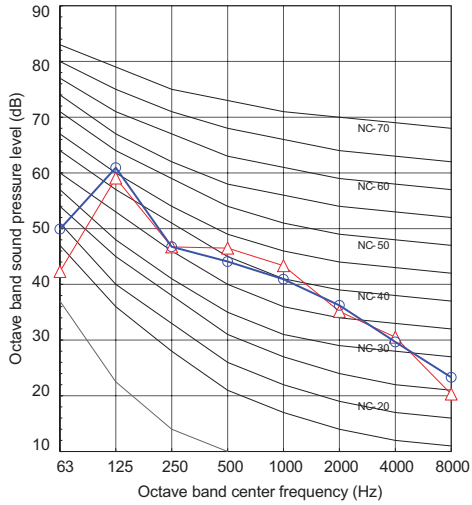

▼ HWT-1401H(R)W-E

- Maximum operation

Sound pressure level (dB(A))	Cooling	Heating
	59	60

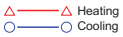

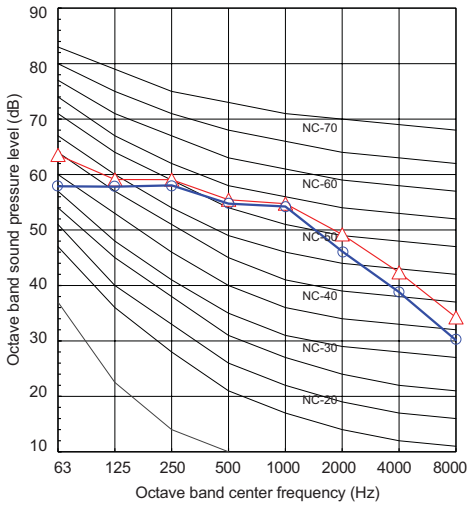

- Rated operation

Sound pressure level (dB(A))	Cooling	Heating
	59	59

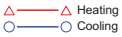

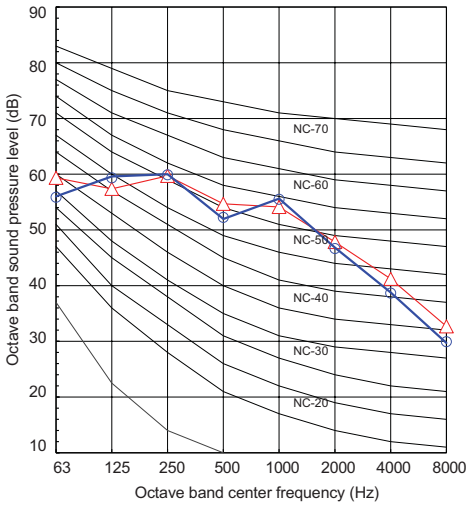

- Silent operation

Sound pressure level (dB(A))	Cooling	Heating
	51	50

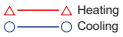

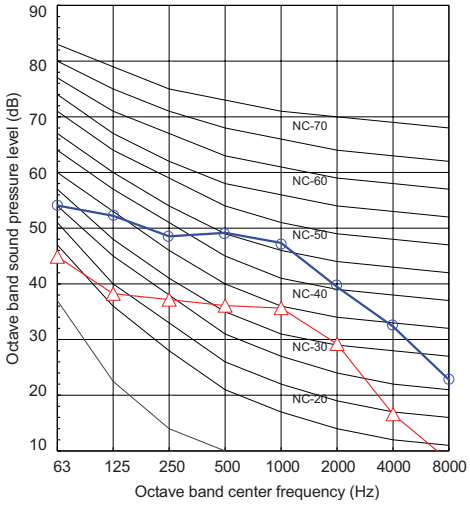

▼ HWT-801H8(R)W-E

- Maximum operation

Sound pressure level (dB(A))	Cooling	Heating
	53	59

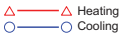

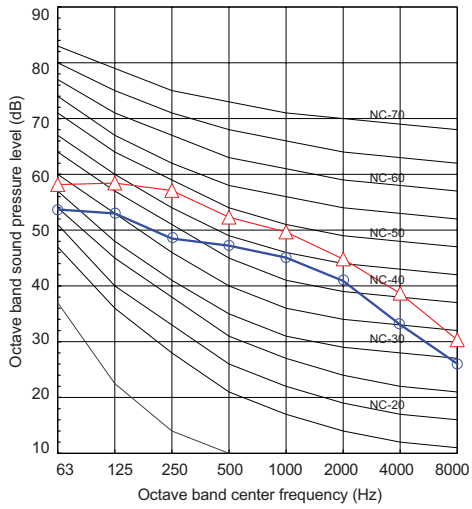

- Rated operation

Sound pressure level (dB(A))	Cooling	Heating
	53	50

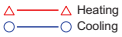

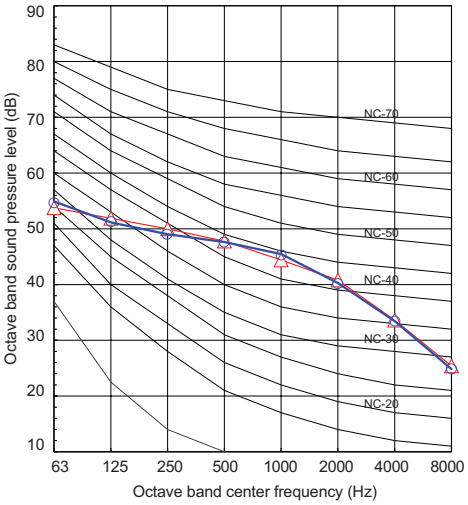

- Silent operation

Sound pressure level (dB(A))	Cooling	Heating
	48	49

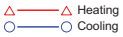

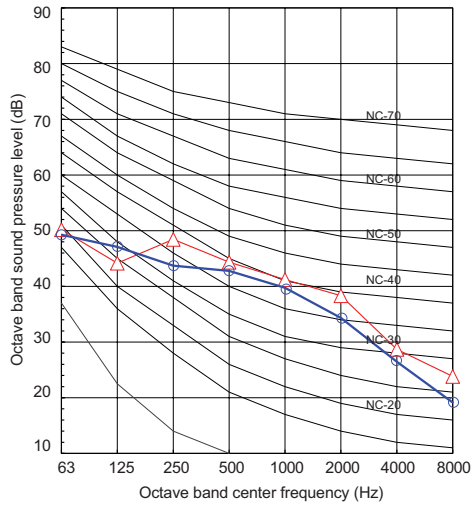

▼ HWT-1101H8(R)W-E

- Maximum operation

Sound pressure level (dB(A))	Cooling	Heating
	54	60

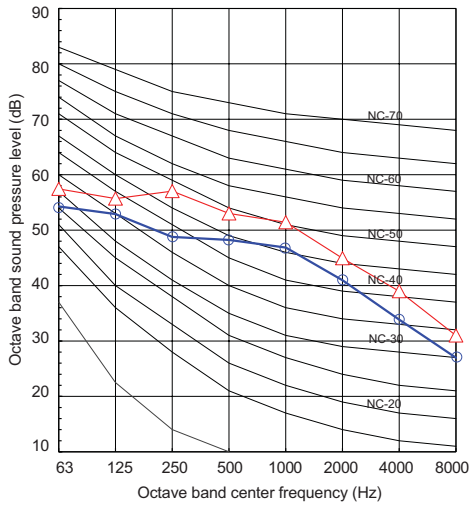

- Rated operation

Sound pressure level (dB(A))	Cooling	Heating
	54	58

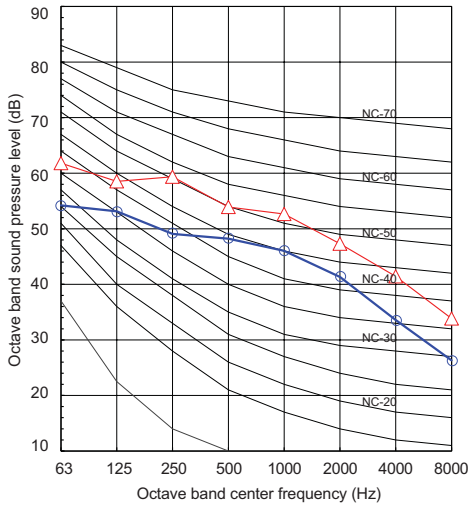

- Silent operation

Sound pressure level (dB(A))	Cooling	Heating
	49	49

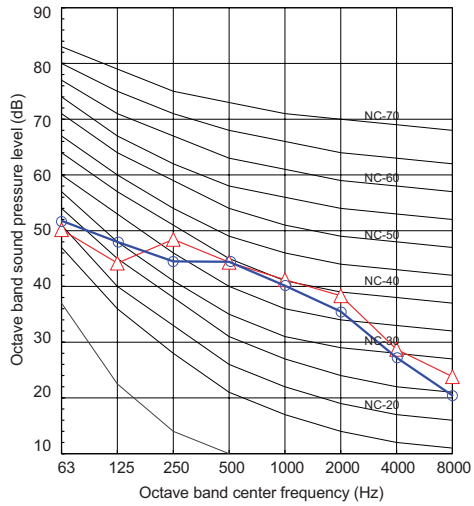

▼ HWT-1401H8(R)W-E

- Maximum operation

Sound pressure level (dB(A))	Cooling	Heating
	59	60

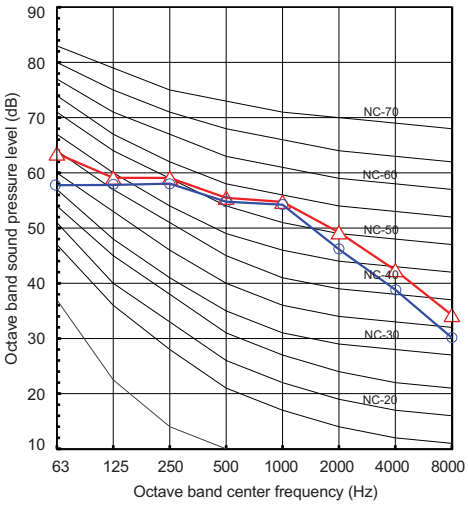

- Rated operation

Sound pressure level (dB(A))	Cooling	Heating
	59	59

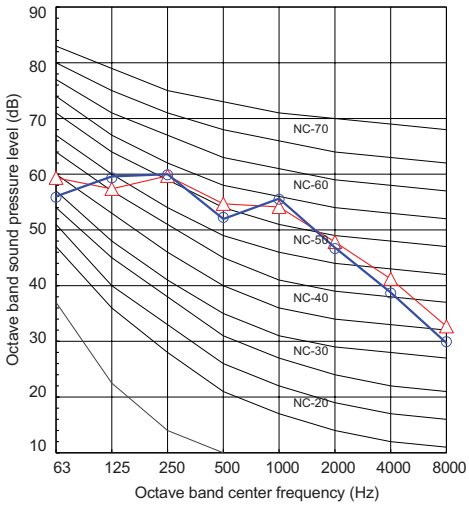

- Silent operation

Sound pressure level (dB(A))	Cooling	Heating
	51	50

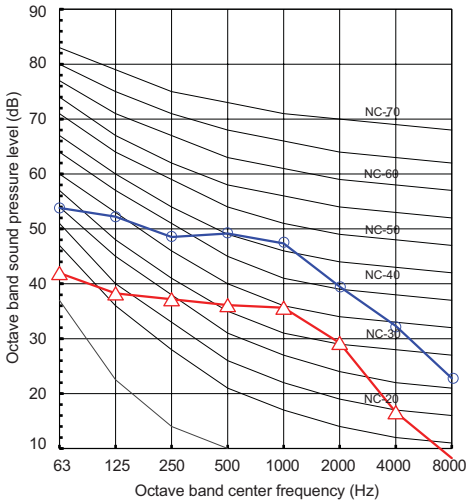

3-6-2. Sound Power

▼ HWT-401HW-E

- Maximum operation

Condition		
Cooling	A35/-	W12/7
Heating	A7/6	W47/55

Sound power level (dB(A))	Cooling	Heating
	62	65

Cooling

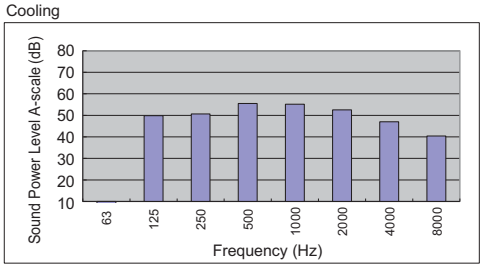

Heating

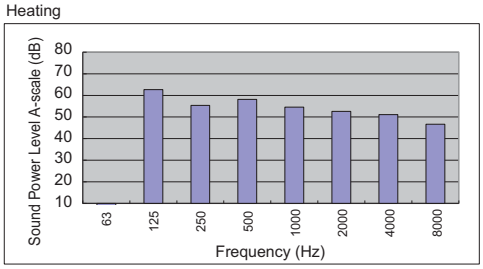

- Rated operation

Condition		
Cooling	A35/-	W12/7
Heating	A7/6	W30/35

Sound power level (dB(A))	Cooling	Heating
	60	59

Cooling

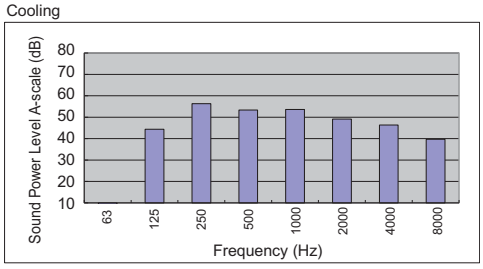

Heating

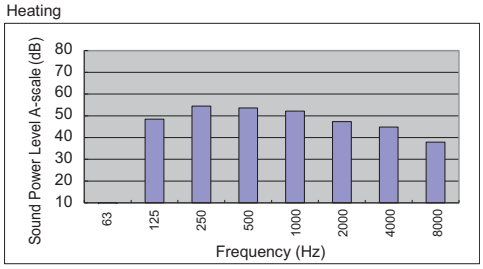

- Silent operation

Condition		
Cooling	A35/-	W12/7
Heating	A7/6	W30/35

Sound power level (dB(A))	Cooling	Heating
	55	54

Cooling

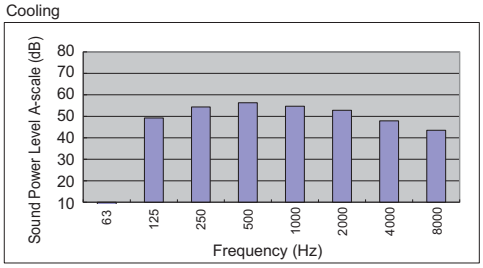

Heating

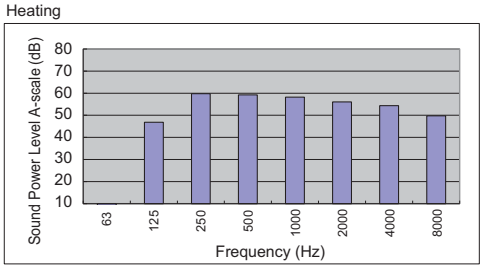

▼ HWT-601HW-E

- Maximum operation

Condition		
Cooling	A35/-	W12/7
Heating	A7/6	W47/55

Sound power level (dB(A))	Cooling	Heating
	62	65

Cooling

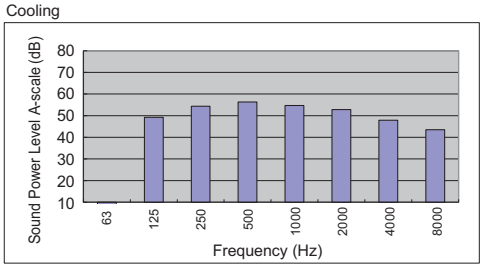

Heating

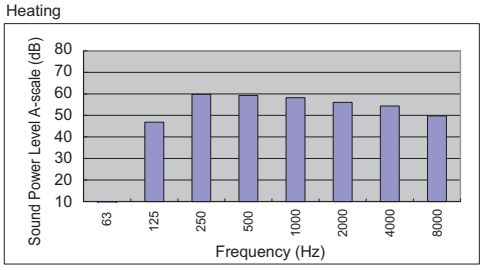

- Rated operation

Condition		
Cooling	A35/-	W12/7
Heating	A7/6	W30/35

Sound power level (dB(A))	Cooling	Heating
	61	62

Cooling

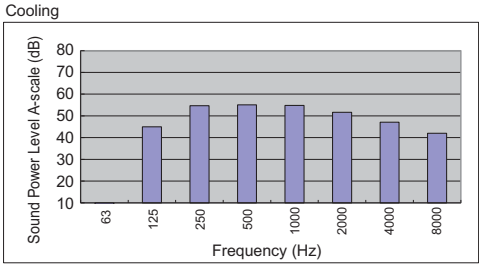

Heating

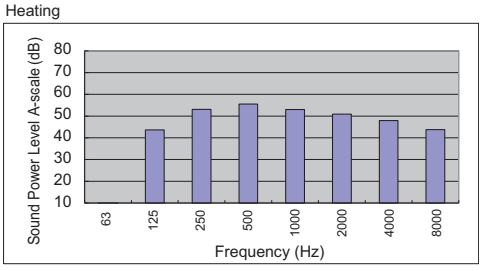

- Silent operation

Condition		
Cooling	A35/-	W12/7
Heating	A7/6	W30/35

Sound power level (dB(A))	Cooling	Heating
	57	58

Cooling

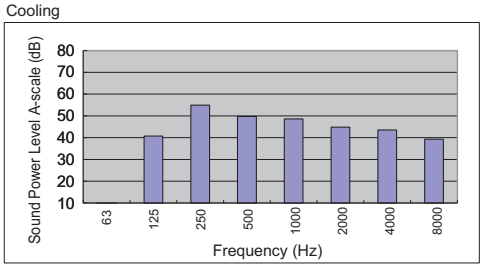

Heating

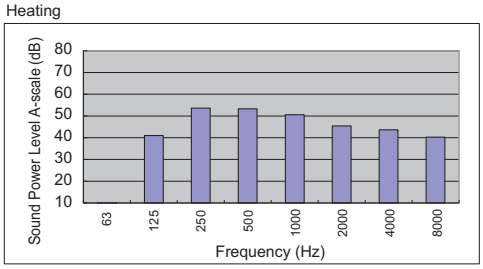

▼ HWT-801H(R)W-E

- Maximum operation

Condition		
Cooling	A35/-	W12/7
Heating	A7/6	W47/55

Sound power level (dB(A))	Cooling	Heating
	63	65

Cooling

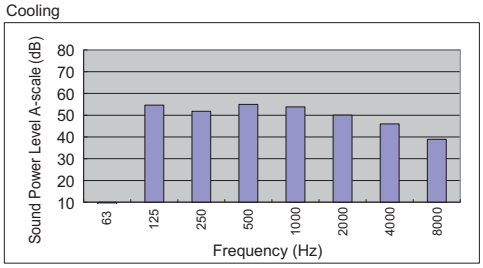

Heating

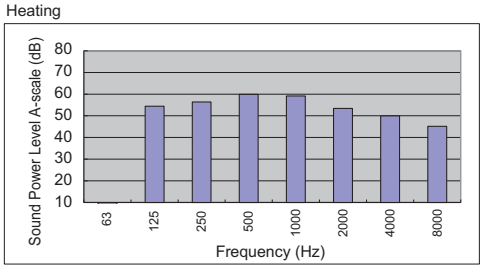

- Rated operation

Condition		
Cooling	A35/-	W12/7
Heating	A7/6	W30/35

Sound power level (dB(A))	Cooling	Heating
	62	63

Cooling

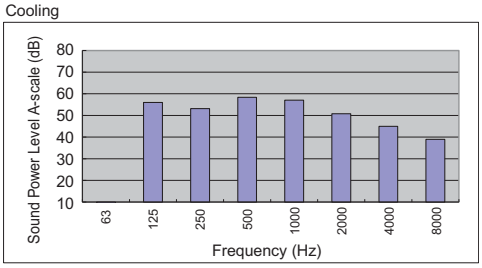

Heating

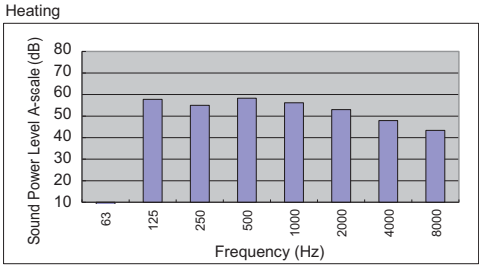

- Silent operation

Condition		
Cooling	A35/-	W12/7
Heating	A7/6	W30/35

Sound power level (dB(A))	Cooling	Heating
	59	58

Cooling

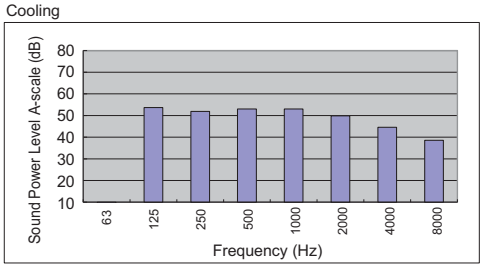

Heating

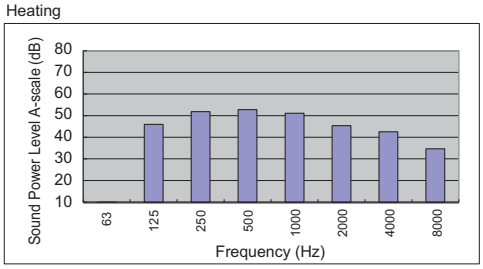

▼ HWT-1101H(R)W-E

- Maximum operation

Condition		
Cooling	A35/-	W12/7
Heating	A7/6	W47/55

Sound power level (dB(A))	Cooling	Heating
	64	65

Cooling

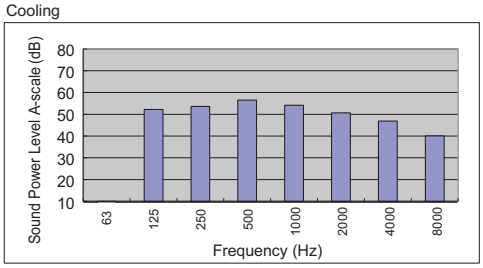

Heating

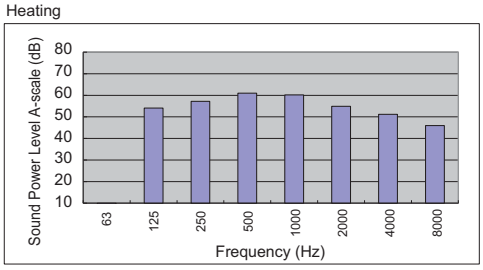

- Rated operation

Condition		
Cooling	A35/-	W12/7
Heating	A7/6	W30/35

Sound power level (dB(A))	Cooling	Heating
	62	64

Cooling

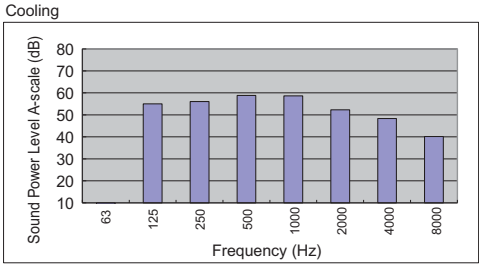

Heating

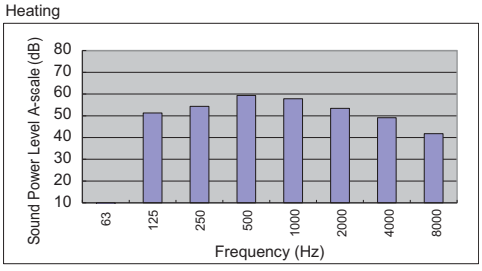

- Silent operation

Condition		
Cooling	A35/-	W12/7
Heating	A7/6	W30/35

Sound power level (dB(A))	Cooling	Heating
	60	62

Cooling

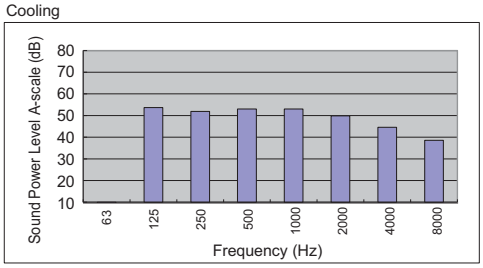

Heating

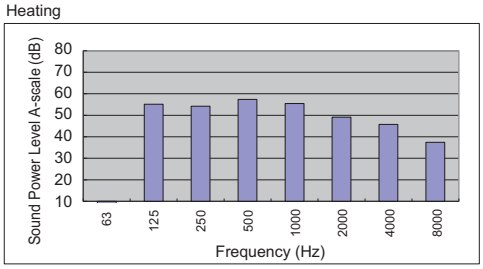

▼ HWT-1401H(R)W-E

- Maximum operation

Condition		
Cooling	A35/-	W12/7
Heating	A7/6	W47/55

Sound power level (dB(A))	Cooling	Heating
	70	72

Cooling

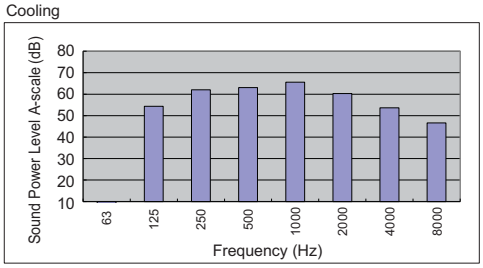

Heating

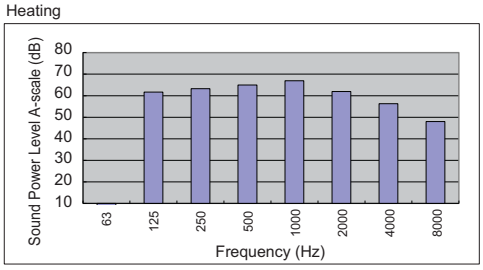

- Rated operation

Condition		
Cooling	A35/-	W12/7
Heating	A7/6	W30/35

Sound power level (dB(A))	Cooling	Heating
	70	70

Cooling

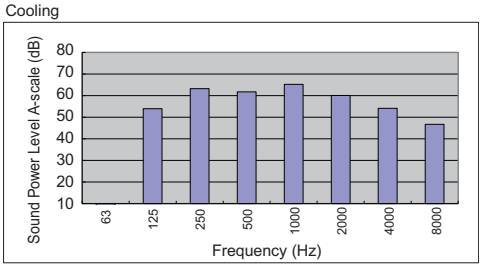

Heating

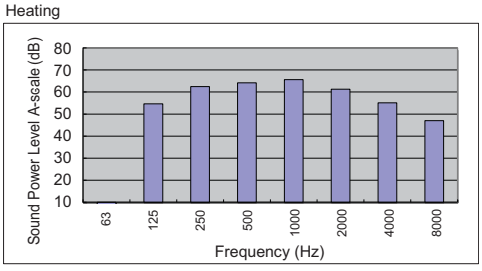

- Silent operation

Condition		
Cooling	A35/-	W12/7
Heating	A7/6	W30/35

Sound power level (dB(A))	Cooling	Heating
	63	62

Cooling

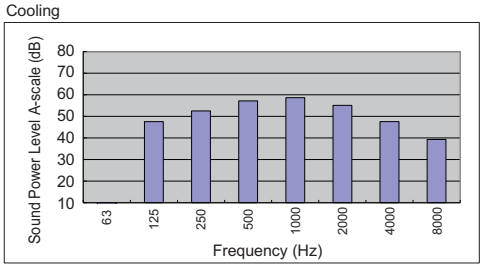

Heating

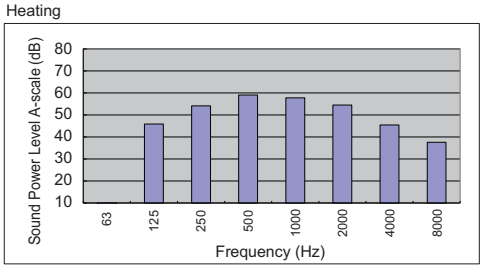

▼ HWT-801H8(R)W-E

- Maximum operation

Condition		
Cooling	A35/-	W12/7
Heating	A7/6	W47/55

Sound power level (dB(A))	Cooling	Heating
	66	71

Cooling

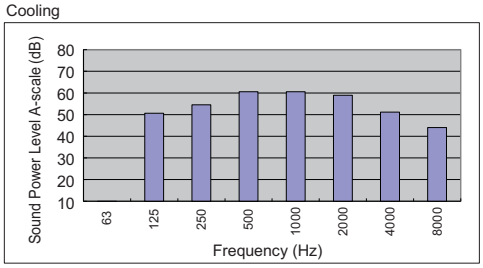

Heating

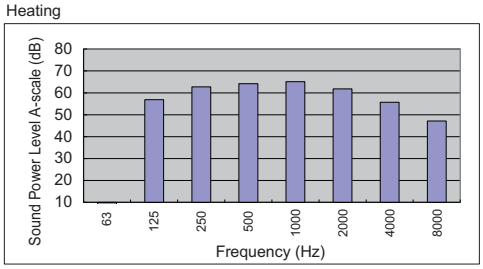

- Rated operation

Condition		
Cooling	A35/-	W12/7
Heating	A7/6	W30/35

Sound power level (dB(A))	Cooling	Heating
	65	63

Cooling

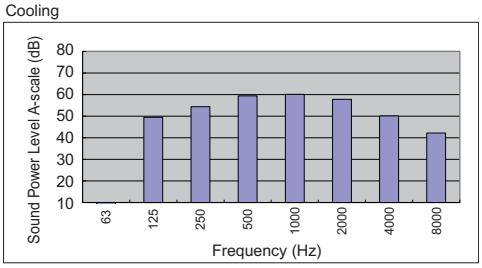

Heating

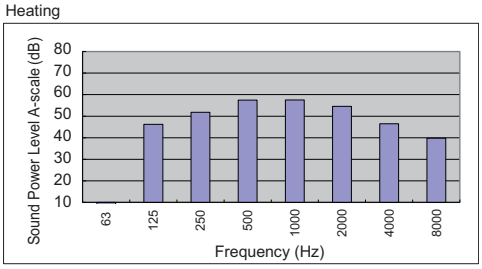

- Silent operation

Condition		
Cooling	A35/-	W12/7
Heating	A7/6	W30/35

Sound power level (dB(A))	Cooling	Heating
	61	61

Cooling

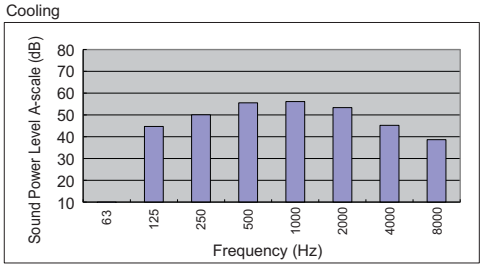

Heating

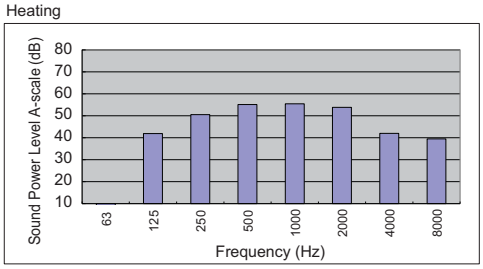

▼ HWT-1101H8(R)W-E

- Maximum operation

Condition		
Cooling	A35/-	W12/7
Heating	A7/6	W47/55

Sound power level (dB(A))	Cooling	Heating
	67	72

Cooling

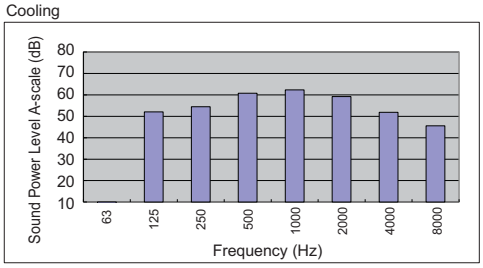

Heating

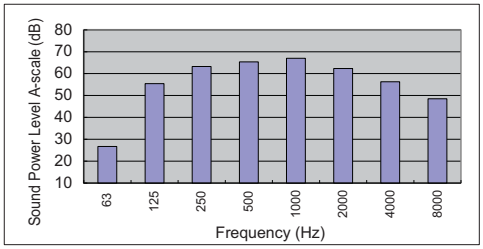

- Rated operation

Condition		
Cooling	A35/-	W12/7
Heating	A7/6	W30/35

Sound power level (dB(A))	Cooling	Heating
	67	70

Cooling

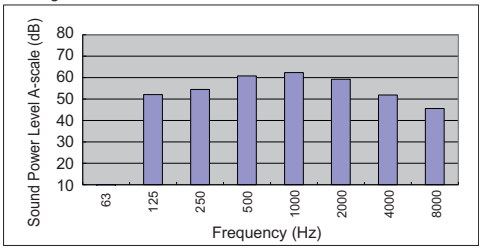

Heating

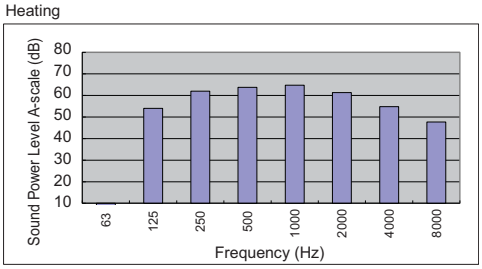

- Silent operation

Condition		
Cooling	A35/-	W12/7
Heating	A7/6	W30/35

Sound power level (dB(A))	Cooling	Heating
	62	61

Cooling

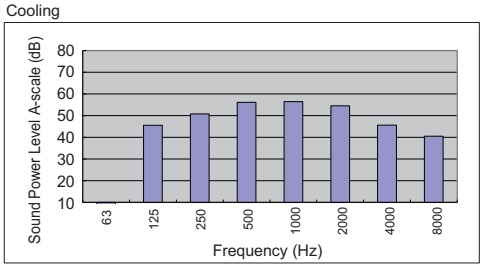

Heating

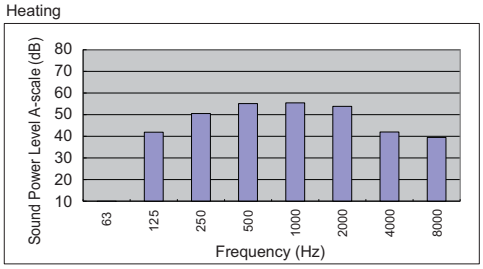

▼ HWT-1401H8(R)W-E

- Maximum operation

Condition		
Cooling	A35/-	W12/7
Heating	A7/6	W47/55

Sound power level (dB(A))	Cooling	Heating
	70	72

Cooling

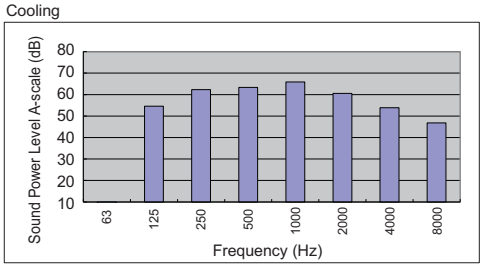

Heating

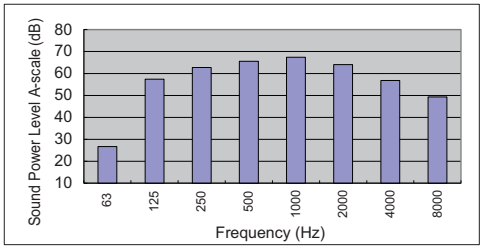

- Rated operation

Condition		
Cooling	A35/-	W12/7
Heating	A7/6	W30/35

Sound power level (dB(A))	Cooling	Heating
	70	70

Cooling

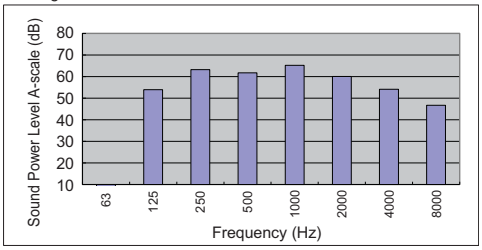

Heating

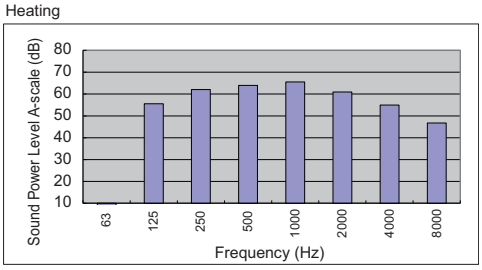

- Silent operation

Condition		
Cooling	A35/-	W12/7
Heating	A7/6	W30/35

Sound power level (dB(A))	Cooling	Heating
	63	62

Cooling

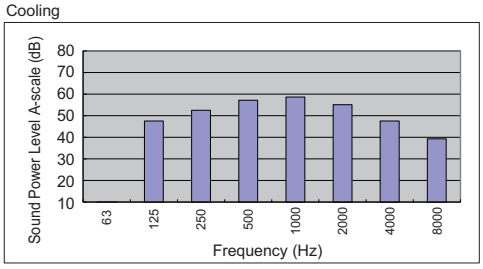

Heating

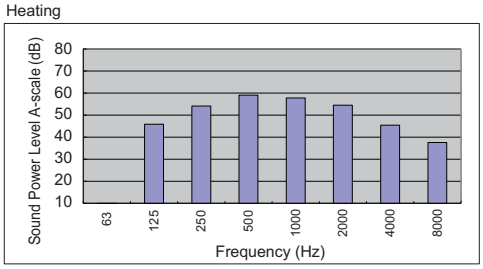

4. HOT WATER CYLINDER

4-1. Specifications

Hot water cylinder specifications

Hot water cylinder			HWS-1501 CSHM3-E	HWS-2101 CSHM3-E	HWS-3001 CSHM3-E
Water volume		litres	150	210	300
Appearance	Color		White		
	Material		Plastic coated steel		
Cylinder	Material		Stainless steel		
Insulation	Material		Flame retardant expanded polyurethane foam		
	Thickness	mm	50		
Heat exchanger	Material		Stainless steel tube		
Immersion heater	Type		Single straight, Alloy 825 sheathed		
	Capacity	kW	2.75		
Outer dimension	Height	mm	1,090	1,474	2,040
	Diameter	mm	550		
Unit weight		kg	31	41	59
Packing dimension	Height	mm	1,213	1,781	2,118
	Width	mm	576		
	Depth	mm	640		
Total weight	unit and packing	kg	37	44	59
Maximum water temperature		°C	75		
Maximum water pressure		bar	10		
Water pipe Hydro-cylinder	Inlet	mm	22		
	Outlet	mm	22		
Water pipe Domestic water-cylinder	Inlet	mm	22		
	Outlet	mm	22		
Standard accessories	Expansion Vessel	litres	Not included		
			Installation manual		
			Safety group NF7bar		
			Compression nuts and olives		
			Cylinder heater key spanner		

4-2. Dimension

General dimensions and performance

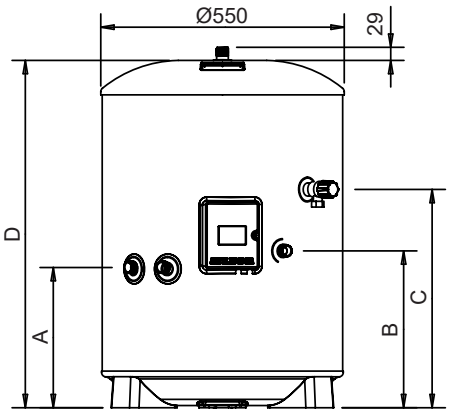

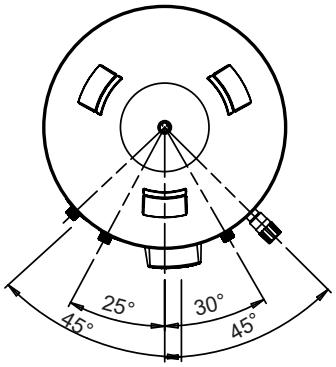

MODEL	HWS-1501CSHM3-E	HWS-2101CSHM3-E	HWS-3001CSHM3-E
NOMINAL CAPACITY (litres)	150	210	300
A (mm)	315	315	315
B (mm)	354	354	354
C (mm)	800	1184	1474
D (mm)	1090	1474	2040
SURFACE AREA (sq.m)	0.65	0.79	0.79
HOT WATER OUTPUT AT 60ºC (litres)	102	163	254
MIXED HOT WATER OUTPUT AT 40ºC (litres)	243	329.5	476
HEATLOSS (kWh/24h)	1.45	1.91	2.52
HEATING TIME 15ºC TO 60ºC - USING ELECTRIC CYLINDER HEATER ONLY (mins)	123	188	262
CAPACITY HEATED USING ELECTRIC CYLINDER HEATER ONLY (litres)	102	163	254

4-3. Piping Diagram

▼HWS-1501CSHM3-E, HWS-2101CSHM3-E, HWS-3001CSHM3-E

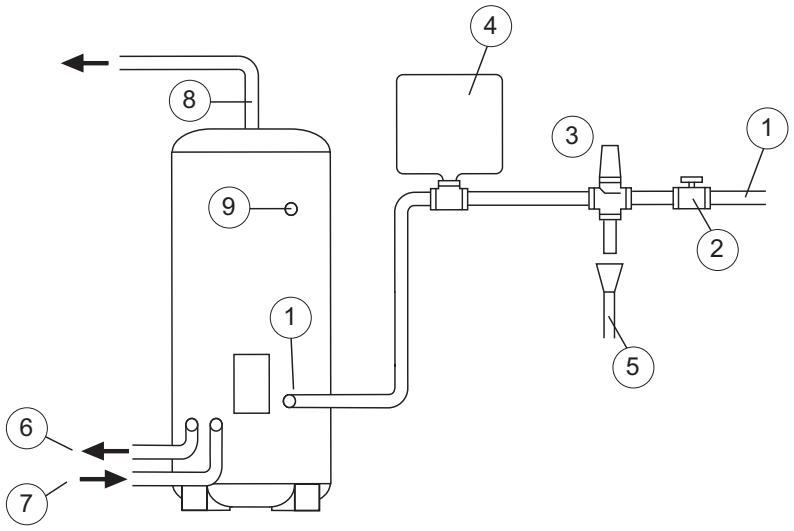

1. COLD WATER INLET
2. ISOLATING VALVE
3. SAFETY GROUP NF7 BAR
4. SANITARY WATER EXPANSION VESSEL
5. DISCHARGE PIPE
6. PRIMARY CIRCUIT RETURI
7. PRIMARY CIRCUIT FLOW
8. HOT WATER OUTLET
9. SANITARY WATERRE-CIRCULATION CONNECTION

Typical discharge pipe arrangement (extract from Building Regulation G3 Guidance section 3.9)

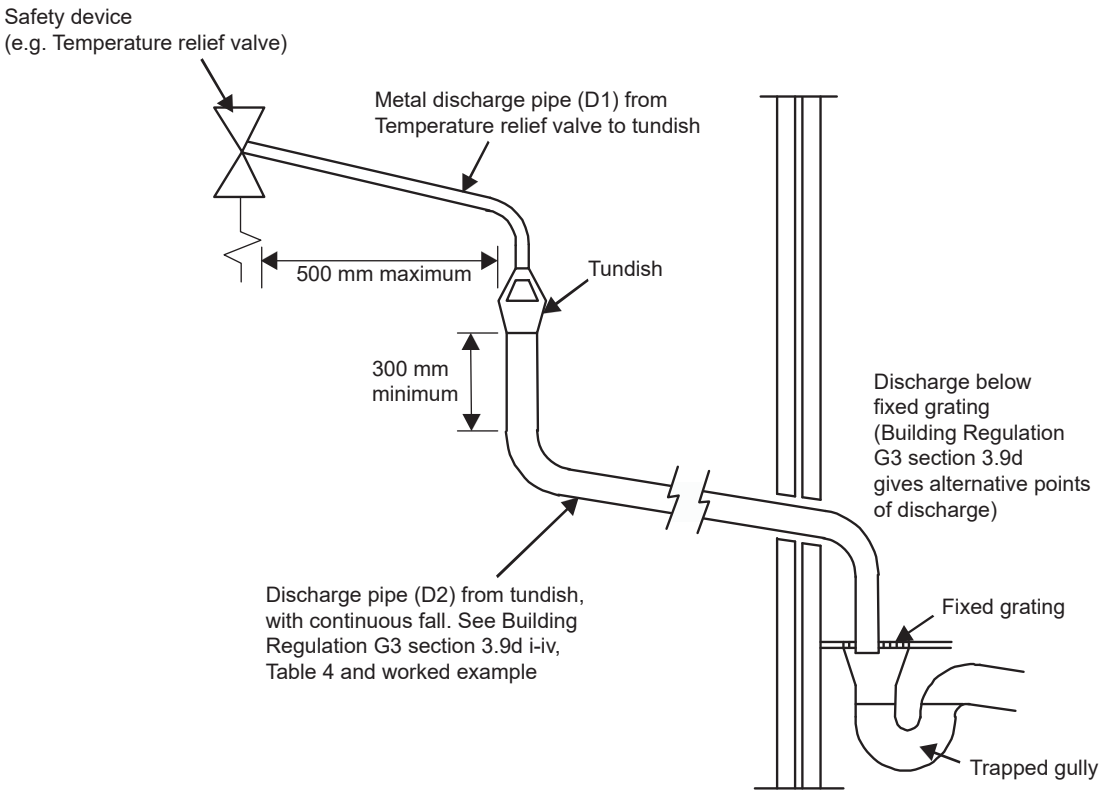

4-4. Wiring Diagram

▼HWS-1501CSHM3-E, HWS-2101CSH3-E, HWS-3001CSHM3-E

Electrical Connections (Schematic)

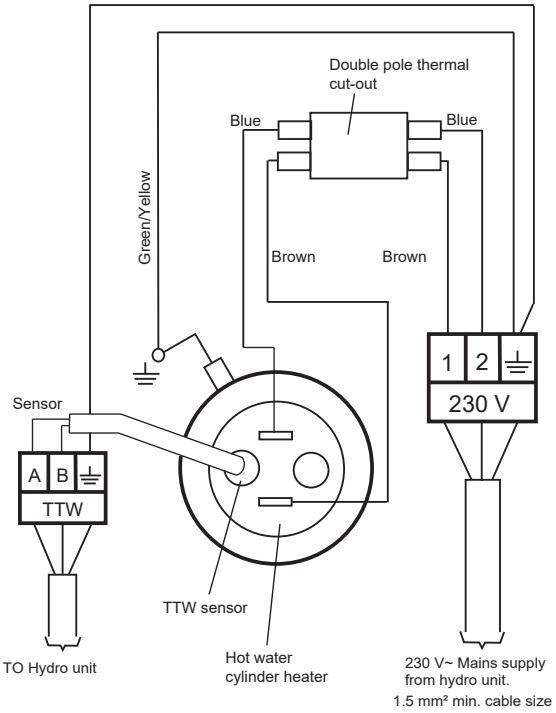

Thermal cut-out

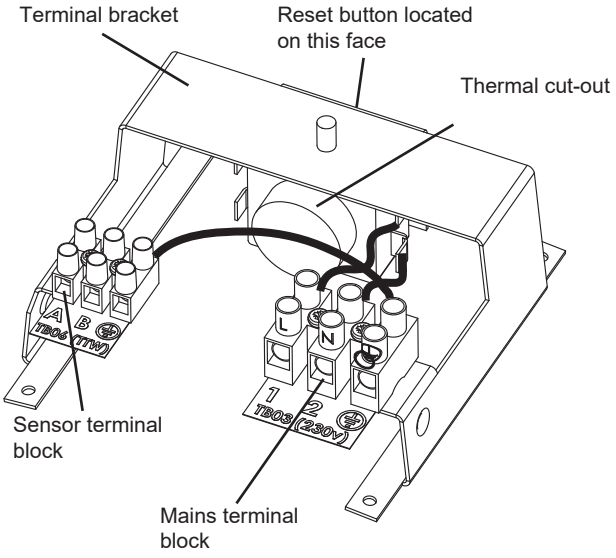

NOTE:
The cover and element assembly have been removed from this view for clarity

Air to Water Heat Pump
Engineering Data Book

April, 2023

Model name:

Hydro Unit -Wall Mounted Type-	Hydro Unit -All In One Type-		Outdoor Unit	Hot Water Cylinder
HWT-601XWHM3W-E	HWT-602S21SM3W-E	HWT-1102S21ST9W-E	HWT-401HW-E	HWS-1501CSHM3-E
HWT-601XWHM6W-E	HWT-602S21SM6W-E	HWT-1102S21MT6W-E	HWT-601HW-E	HWS-2101CSHM3-E
HWT-601XWHT6W-E	HWT-602S21ST6W-E	HWT-1102S21MT9W-E	HWT-801HW-E	HWS-3001CSHM3-E
HWT-1101XWHM3W-E	HWT-602S21MM3W-E	HWT-1402S21SM3W-E	HWT-1101HW-E	
HWT-1101XWHM6W-E	HWT-602S21MM6W-E	HWT-1402S21MM3W-E	HWT-1401HW-E	
HWT-1101XWHT6W-E	HWT-602S21MT6W-E	HWT-1402S21SM6W-E	HWT-801HRW-E	
HWT-1101XWHT9W-E	HWT-1102S21SM3W-E	HWT-1402S21MM6W-E	HWT-1101HRW-E	
HWT-1401XWHM3W-E	HWT-1102S21SM6W-E	HWT-1402S21ST6W-E	HWT-1401HRW-E	
HWT-1401XWHM6W-E	HWT-1102S21MM3W-E	HWT-1402S21MT6W-E	HWT-801H8W-E	
HWT-1401XWHT6W-E	HWT-1102S21MM6W-E	HWT-1402S21ST9W-E	HWT-1101H8W-E	
HWT-1401XWHT9W-E	HWT-1102S21ST6W-E	HWT-1402S21MT9W-E	HWT-1401H8W-E	
			HWT-801H8RW-E	
			HWT-1101H8RW-E	
			HWT-1401H8RW-E	

Toshiba Carrier Corporation